VOLUME 39, NUMBER 2, JUNE 2016

HADRONIC JOURNAL

HADRONIC JOURNAL Volume 39, Number 2, June 2016

Founded in 1978 by Prof. R. M. Santilli at Harvard University. Some of the past Editors include Professors S. L. Adler, A. 0. Barut, L. C. Biedenharn, N. N. Bogoliubov, M. Froissart, J.Lohmus, S. Okubo, Nobel Laureate Ilya Prigogine, M. L. Tomber, J. P.Vigier, J. Wess, Nobel Laureate Chen Ning Yang.

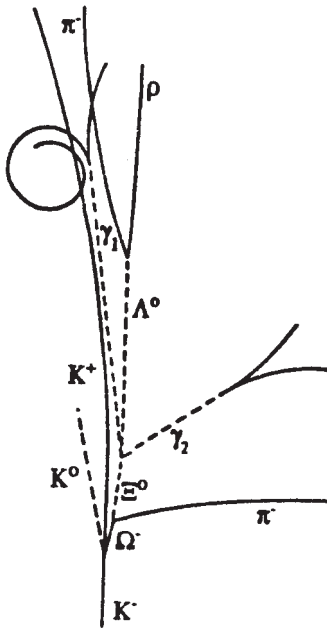

EDITORIAL BOARD

A.O.ANIMALU
A. K. ARINGAZIN
A. A. BHALEKAR
S. J. DHOBLE
J. DUNNING-DAVIES
T. L. GILL
L. P. HORWITZ
S. L. KALLA
S. I. KRUGLOV
M. NISHIOKA
R. F. O'CONNELL
Z. OZIEWICZ
E. RECAMI
M. SALEEM
B. G. SIDHARTH
S. SILVESTROV
H. M. SRIVASTAVA
E. TRELL
R.I. TSONCHEV
QI-REN ZHANG
C.A.WOLF
YI-ZHONG ZHUO

FOUNDER and
Editor In Chief
R. M. SANTILLI

HADRONIC PRESS, INC.

HADRONIC JOURNAL

VOLUME 39, NUMBER 2, JUNE 2016

SOLUTION OF A NON-HOMOGENEOUS FRACTIONAL ORDER TELEGRAPH EQUATION, 147
Leda Galué
Centro de Investigación de Matemática Aplicada (CIMA)
Facultad de Ingeniería
Universidad del Zulia, Venezuela

ENERGY MOMENTUM IN GENERAL RELATIVITY, 169
Kenneth Dalton
General Delivery, Bang Saphan Yai 77140
Prachuap Kiri Khan, Thailand

GRAVITATIONALLY INDUCED CHIRAL CURRENT AND MASS GENERATION, 175
Sergey N. Andrianov
Institute of Advanced Research
Academy of Sciences of the Republic of Tatarstan, Russia
Rinat A. Daishev
Department of Physics, Kazan Federal University, Russia
Sergey M. Kozyrev
Scientific center for gravity wave studies "Dulkyn", Kazan, Russia

RELATIVISTIC KINEMATICS OF TWO-PARAMETRIC RIEMANN SURFACE IN GENUS TWO, 181
A.V. Nazarenko
Bogolyubov Institute for Theoretical Physics
14-b, Metrologichna Str., Kiev 03680, Ukraine
Yu.A. Kulinich
Astronomical Observatory, Ivan Franko National
University of Lviv, 8, Kyryla and Methodia Str., Lviv
79005, Ukraine

ON CORDA'S 'CLARIFICATION' OF SCHWARZSCHILD'S SOLUTION, 199
Stephen J. Crothers
P.O. Box 1546, Sunshine Plaza 4556, QLD Australia
and
Institute for Basic Research
35246 US 19 North #215
Palm Harbor, FL 34684 USA

REINTERPRETATION OF THE LORENTZ 'LOCAL AND TRUE' TIMES WITHIN NON-RECIPROCAL VELOCITIES, 227
Zbiegniew Oziewicz
Universidad Nacional Autónoma de México
Facultad de Estudios Superiores Cuautitlán, México
DOPPLER'S RELATIVITY OF RADIATION ENERGY VERSUS COMPTON SCATTERING/REFLECTION, 253
Zbiegniew Oziewicz
Universidad Nacional Autónoma de México
Facultad de Estudios Superiores Cuautitlán, México

HADRONIC JOURNAL 39, 147 - 167 (2016)

SOLUTION OF A NON-HOMOGENEOUS FRACTIONAL ORDER TELEGRAPH EQUATION

Leda Galué
Centro de Investigación de Matemática Aplicada (CIMA)
Facultad de Ingeniería
Universidad del Zulia, Venezuela
lgalue@hotmail.com

Received March 1, 2016

Abstract

Fractional differential equations frequently appear in various fields and provide more accurate models of systems under consideration due to fractional derivatives. In particular, fractional order telegraph equations have been considered and solved for many researchers, using different methods. In this paper we derived an approximate analytical solution of a non-homogeneous space-time fractional telegraph equation, considering the fractional derivatives in Caputo sense, and using the generalized differential transform method. The solution is given in terms of generalized Mittag-Leffler function and the generalized Wright function. Further, various graphics are included which show the behavior of the solution obtained, and results given earlier by Garg, Manohar and Kalla are obtained as particular cases of ones our.

Key words: Fractional order telegraph equation, generalized differential transform method, Caputo fractional derivative, generalized Mittag-Leffler function, generalized Wright function.
AMS Subject Classification: 35C05, 35C10.

Copyright © 2016 by Hadronic Press, Inc., Palm Harbor, FL 34684, USA

1 Introduction

The telegraph equation is a partial differential equation with constant coefficients given by

$$u_{tt} - c^2 u_{xx} + a u_t + b u = 0, \tag{1}$$

where a, b and c are constants [5].

This equation is used in: signal analysis for transmission and propagation of electrical signals, modeling reaction diffusion in various branches of engineering sciences [5, 23], in the propagation of pressure waves in the study of pulsatile blood flow in arteries and in one-dimensional random motion of bugs along a hedge [5]. Also, the experimental results described in [7, 8, 21] seem to be better modelled by the telegraph equation than by the heat equation [3].

Fractional differential equations frequently appear in various fields and provide more accurate models of systems under consideration due to fractional derivatives. For example, fractional derivatives have been used successfully to model frequency dependent damping behavior of many viscoelastic materials [18] and the so called anomalous phenomena [14]. They are also used in modeling of many chemical processed, mathematical biology and many other problems in engineering [17, 21, 22]. In particular, fractional order telegraph equation models the transport of thermal neutrons inside a nuclear reactor with slab geometry [34].

Many authors, namely, Biazar et al. [1], Cascaval et al. [3], Das et al. [4], Dehghan et al. [6], El-Azab and El-Gamel [9], Figueiredo et al. [10], Ford et al. [11], Galué [12], Gao and Chi [13], Garg et al. [14], Garg and Sharma [15], Hariharan et al. [16], Hayat and Mohyud-Din [17], Huang [18], Karimi et al. [19], Kaya [20], Momani [25], Odibat and Momani [27], Orsingher and Beghin [29], Orsingher and Zhao [30], Sevimlican [32], Xindong et al. [36], Yakubovich and Rodrigues [37], Yildirim [38], etc., have solved fractional order telegraph equations, using different methods, such as, variational iteration method, transform method, Adomian decomposition method, juxtaposition of

transforms, generalized differential transform method, homotopy perturbation method, wavelet method, matrix method, homotopy analysis method.

In this paper we derived an approximate analytical solution of a nonhomogeneous space-time fractional telegraph equation, considering the fractional derivatives in Caputo sense, and using the generalized differential transform method. The solution is given in terms of generalized Mittag-Leffler function and the generalized Wright function. Further, various graphics are included which show the behavior of the solution obtained, and results given earlier by Garg et al. [14] are obtained as particular cases of ones our.

The following definitions are necessary for the development from the next section.

1.1 Caputo fractional derivative: Caputo fractional derivative of order α is defined as [2, 31]

$$D_a^\alpha f(x) = \frac{1}{\Gamma(m-\alpha)} \int_a^x \frac{f^{(m)}(\xi)}{(x-\xi)^{\alpha-m+1}} d\xi, \quad m-1 < \alpha \leq m, \ m \in \mathbb{N}. \tag{2}$$

1.2 The generalized Wright function: An interesting generalization of the series ${}_pF_q$ is given by [33]

$${}_p\Psi_q \left[\begin{matrix} (\alpha_1, A_1), \ \dots \ , (\alpha_p, A_p) \\ (\beta_1, B_1), \ \dots \ , (\beta_q, B_q) \end{matrix} ; z \right] = \sum_{n=0}^{\infty} \frac{\Gamma(\alpha_1 + A_1 n) \dots \Gamma(\alpha_p + A_p n)}{\Gamma(\beta_1 + B_1 n) \dots \Gamma(\beta_q + B_q n)} \frac{z^n}{n!}, \tag{3}$$

where $A_j > 0 \ (j = 1, \dots, p)$; $B_j > 0 \ (j = 1, \dots, q)$; $1 + \sum_{j=1}^{q} B_j - \sum_{j=1}^{p} A_j \geq 0$, for suitably bounded values of $|z|$.

1.3 Mittag-Leffler function [24]

$$E_\alpha(z) = \sum_{k=0}^{\infty} \frac{z^k}{\Gamma(\alpha k + 1)} = {}_1\Psi_1 \left[\begin{smallmatrix} (1,1) \\ (1,\alpha) \end{smallmatrix} ; z \right], \ z \in \mathbb{C}, \ \Re(\alpha) > 0. \tag{4}$$

For $\alpha = 1$, $E_\alpha(z)$ reduces to e^z.

1.4 Generalized Mittag-Leffler function: Given by Wiman [35] and defined by

$$E_{\alpha,\beta}(z) = \sum_{k=0}^{\infty} \frac{z^k}{\Gamma(\alpha k + \beta)} = {}_1\Psi_1\left[{}^{(1,1)}_{(\beta,\alpha)}; z\right], \ z \in \mathbb{C}, \ \Re(\alpha) > 0, \ \Re(\beta) > 0. \tag{5}$$

2 Generalized Two-Dimensional Differential Transform

Consider a function of two variables $u(x, y)$ and suppose that it can be represented as a product of two single variable functions, i.e. $u(x, y) = f(x)g(y)$. If function $u(x, y)$ is analytic and differentiated continuously with respect to x and y in the domain of interest, then the generalized two-dimensional differential transform of the function $u(x, y)$ is given by ([26]-[28])

$$U_{\alpha,\beta}(k, h) = \frac{1}{\Gamma(\alpha k + 1)\Gamma(\beta h + 1)} \left[\left(D^\alpha_{x_0}\right)^k \left(D^\beta_{y_0}\right)^h u(x, y)\right]_{(x_0,y_0)}, \tag{6}$$

where $0 < \alpha, \beta \leq 1$, $\left(D^\alpha_{x_0}\right)^k = D^\alpha_{x_0} D^\alpha_{x_0} \ldots D^\alpha_{x_0}$ (k times), $D^\alpha_{x_0}$ is defined by (2) and $U_{\alpha,\beta}(k, h)$ is the transformed function.

The generalized differential transform inverse of $U_{\alpha,\beta}(k, h)$ is given by

$$u(x, y) = \sum_{k=0}^{\infty} \sum_{h=0}^{\infty} U_{\alpha,\beta}(k, h)(x - x_0)^{\alpha k}(y - y_0)^{\beta h}. \tag{7}$$

Basic properties of the generalized two-dimensional differential transform:

Let $U_{\alpha,\beta}(k, h)$, $V_{\alpha,\beta}(k, h)$, $W_{\alpha,\beta}(k, h)$ be generalized two-dimensional differential transform of the functions $u(x, y)$, $v(x, y)$ and $w(x, y)$, respectively, then

i) If $u(x, y) = v(x, y) \pm w(x, y)$ then $U_{\alpha,\beta}(k, h) = V_{\alpha,\beta}(k, h) \pm W_{\alpha,\beta}(k, h)$.

ii) If $u(x, y) = av(x, y)$, a is constant, then $U_{\alpha,\beta}(k, h) = aV_{\alpha,\beta}(k, h)$.

iii) If $u(x,y) = D^{\gamma}_{x_0} v(x,y)$, where $m-1 < \gamma \leq m$, $m \in \mathbb{N}$, then $U_{\alpha,\beta}(k,h) = \frac{\Gamma(\alpha k+\gamma+1)}{\Gamma(\alpha k+1)} V_{\alpha,\beta}(k+\frac{\gamma}{\alpha},h)$.
iv) If $u(x,y) = D^{\mu}_{y_0} v(x,y)$, where $n-1 < \mu \leq n$, $n \in \mathbb{N}$, then $U_{\alpha,\beta}(k,h) = \frac{\Gamma(\beta h+\mu+1)}{\Gamma(\beta h+1)} V_{\alpha,\beta}(k,h+\frac{\mu}{\beta})$.

Now we establish a result that will be very useful in the next section.

Let be $u(x,t) = E_{\alpha}(x^{\alpha}) E_{\beta,\gamma}(-t^{\beta})$ then from (6) with $x_0 = t_0 = 0$ we get

$$\begin{aligned} U_{\alpha,\beta}(k,h) &= \frac{1}{\Gamma(\alpha k+1)\Gamma(\beta h+1)} \times \\ &\left[\left(D^{\alpha}_{x_0=0}\right)^k E_{\alpha}(x^{\alpha}) \left(D^{\beta}_{t_0=0}\right)^h E_{\beta,\gamma}(-t^{\beta}) \right]_{(x_0,t_0)=(0,0)} . \end{aligned} \tag{8}$$

The application of the Caputo fractional derivative to $E_{\alpha}(x^{\alpha})$ and $E_{\beta,\gamma}(-t^{\beta})$, after of some calculus, produces

$$\left(D^{\alpha}_{x_0=0}\right)^k E_{\alpha}(x^{\alpha}) = E_{\alpha}(x^{\alpha}), \tag{9}$$

$$\left(D^{\beta}_{t_0=0}\right)^h E_{\beta,\gamma}(-t^{\beta}) = (-1)^h \, {}_2\Psi_2 \left[\begin{matrix} (\beta h+1,\beta),(1,1) \\ (\beta h+\gamma,\beta),(1,\beta) \end{matrix} ; -t^{\beta} \right], \tag{10}$$

where ${}_2\Psi_2[\cdot]$ is a generalized Wright function.

Then the substitution of (9) and (10) in (8) leads us to

$$\begin{aligned} U_{\alpha,\beta}(k,h) &= \frac{(-1)^h}{\Gamma(\alpha k+1)\Gamma(\beta h+1)} \times \\ &\left[E_{\alpha}(x^{\alpha}) \, {}_2\Psi_2 \left[\begin{matrix} (\beta h+1,\beta),(1,1) \\ (\beta h+\gamma,\beta),(1,\beta) \end{matrix} ; -t^{\beta} \right] \right]_{(x_0,t_0)=(0,0)} , \end{aligned}$$

that is,

$$U_{\alpha,\beta}(k,h) = \frac{(-1)^h}{\Gamma(\alpha k+1)\Gamma(\beta h+\gamma)}. \tag{11}$$

3 Main Result

We consider the following non-homogeneous space-time fractional telegraph equation:

$$D_x^{2\alpha}u(x,t) = D_t^{p\beta}u(x,t)+D_t^{r\beta}u(x,t)+u(x,t)-2E_\alpha(x^\alpha)E_{\beta,\gamma}(-t^\beta), \quad (12)$$

$$0 < x < 1, \quad t > 0$$

where $\beta = 1/q$, $p,q,r \in \mathbb{N}$, $1 < 2\alpha \leq 2$, $1 < p\beta \leq 2$, $0 < r\beta \leq 1$, $D_x^{2\alpha} \equiv D_x^\alpha D_x^\alpha$, $D_t^{p\beta} \equiv D_t^\beta D_t^\beta \cdots D_t^\beta$ (p times), $D_t^{r\beta} \equiv D_t^\beta D_t^\beta \cdots D_t^\beta$ (r times), D_x^α and D_t^β are Caputo fractional derivatives, with the initial conditions:

$$u(0,t) = E_{\beta,\gamma}(-t^\beta). \quad (13)$$

$$D_x^\alpha u(0,t) = E_{\beta,\gamma}(-t^\beta), \quad (14)$$

being $\Re(\gamma) > 0$.

By applying generalized two dimensional differential transform, with $x_0 = t_0 = 0$, to both side of (12) and using (6) and (11) we obtain

$$U_{\alpha,\beta}(k+2,h) = \frac{\Gamma(\alpha k+1)}{\Gamma(\alpha k+2\alpha+1)}\left[\frac{\Gamma(\beta h+\beta p+1)}{\Gamma(\beta h+1)}U_{\alpha,\beta}(k,h+p)+\right.$$

$$\left.\frac{\Gamma(\beta h+\beta r+1)}{\Gamma(\beta h+1)}U_{\alpha,\beta}(k,h+r)+U_{\alpha,\beta}(k,h)-\frac{2(-1)^h}{\Gamma(\alpha k+1)\Gamma(\beta h+\gamma)}\right]. \quad (15)$$

Further, by applying generalized two dimensional differential transform to initial conditions and using (6) and (10) we have

$$U_{\alpha,\beta}(0,h) = \frac{1}{\Gamma(\beta h+1)}\left[\left(D_{t_0}^\beta\right)^h E_{\beta,\gamma}(-t^\beta)\right]_{(x_0,t_0)=(0,0)} = \frac{(-1)^h}{\Gamma(\beta h+\gamma)}. \quad (16)$$

$$U_{\alpha,\beta}(1,h) = \frac{(-1)^h}{\Gamma(\alpha+1)\Gamma(\beta h+\gamma)}. \quad (17)$$

From (15) with $k = 0$:

$$U_{\alpha,\beta}(2,h) = \frac{1}{\Gamma(2\alpha+1)}\left[\frac{\Gamma(\beta h+\beta p+1)}{\Gamma(\beta h+1)}U_{\alpha,\beta}(0,h+p)+\right.$$

$$\left.\frac{\Gamma(\beta h+\beta r+1)}{\Gamma(\beta h+1)}U_{\alpha,\beta}(0,h+r)+U_{\alpha,\beta}(0,h)-\frac{2(-1)^h}{\Gamma(\beta h+\gamma)}\right]. \tag{18}$$

For convenience we will use the following notation:

$$T_{i,j}(h) = \frac{\Gamma(\beta h+\beta(ip+jr)+1)}{\Gamma(\beta h+\beta(ip+jr)+\gamma)}\frac{(-1)^{h+ip+jr}}{\Gamma(\beta h+1)}, \tag{19}$$

so,

$$U_{\alpha,\beta}(0,h) = \frac{(-1)^h}{\Gamma(\beta h+\gamma)} = T_{0,0}(h), \tag{20}$$

$$U_{\alpha,\beta}(1,h) = \frac{1}{\Gamma(\alpha+1)}T_{0,0}(h). \tag{21}$$

It is easy to prove that

$$\frac{\Gamma(\beta h+\beta p+1)}{\Gamma(\beta h+1)}T_{i,j}(h+p) = T_{i+1,j}(h). \tag{22}$$

$$\frac{\Gamma(\beta h+\beta r+1)}{\Gamma(\beta h+1)}T_{i,j}(h+r) = T_{i,j+1}(h). \tag{23}$$

Then from (18) and (20) we can write

$$U_{\alpha,\beta}(2,h) = \frac{1}{\Gamma(2\alpha+1)}\left[\frac{\Gamma(\beta h+\beta p+1)}{\Gamma(\beta h+1)}T_{0,0}(h+p)+\right.$$

$$\left.\frac{\Gamma(\beta h+\beta r+1)}{\Gamma(\beta h+1)}T_{0,0}(h+r)-T_{0,0}(h)\right],$$

and using the results (22) and (23) we obtain

$$U_{\alpha,\beta}(2,h) = \frac{1}{\Gamma(2\alpha+1)}\left[T_{1,0}(h)+T_{0,1}(h)-T_{0,0}(h)\right]. \tag{24}$$

Taking $k = 1$ in (15) and according to (20)-(21),

$$U_{\alpha,\beta}(3,h) = \frac{1}{\Gamma(3\alpha+1)}\left[\frac{\Gamma(\beta h+\beta p+1)}{\Gamma(\beta h+\beta p+\gamma)}T_{0,0}(h+p)+\right.$$

$$\left.\frac{\Gamma(\beta h+\beta r+1)}{\Gamma(\beta h+\beta r+\gamma)}T_{0,0}(h+r)-T_{0,0}(h)\right],$$

that is,

$$U_{\alpha,\beta}(3,h) = \frac{1}{\Gamma(3\alpha+1)}\left[T_{1,0}(h)+T_{0,1}(h)-T_{0,0}(h)\right] \tag{25}$$

where we have used (22) and (23).

Similarly we obtain the following expressions:

$$U_{\alpha,\beta}(4,h) = \frac{1}{\Gamma(4\alpha+1)}\left[T_{2,0}(h)+2T_{1,1}(h)+T_{0,2}(h)-3T_{0,0}(h)\right]. \tag{26}$$

$$U_{\alpha,\beta}(5,h) = \frac{1}{\Gamma(5\alpha+1)}\left[T_{2,0}(h)+2T_{1,1}(h)+T_{0,2}(h)-3T_{0,0}(h)\right]. \tag{27}$$

$$U_{\alpha,\beta}(6,h) = \frac{1}{\Gamma(6\alpha+1)}\left[T_{3,0}(h)+3T_{2,1}(h)+3T_{1,2}(h)+T_{0,3}(h)-\right.$$

$$\left.3T_{1,0}(h)-3T_{0,1}(h)+T_{2,0}(h)+2T_{1,1}(h)+T_{0,2}(h)-5T_{0,0}(h)\right]. \tag{28}$$

$$U_{\alpha,\beta}(7,h) = \frac{1}{\Gamma(7\alpha+1)}\left[T_{3,0}(h)+3T_{2,1}(h)+3T_{1,2}(h)+T_{0,3}(h)-\right.$$

$$\left.3T_{1,0}(h)-3T_{0,1}(h)+T_{2,0}(h)+2T_{1,1}(h)+T_{0,2}(h)-5T_{0,0}(h)\right]. \tag{29}$$

$$U_{\alpha,\beta}(8,h) = \frac{1}{\Gamma(8\alpha+1)}\left[T_{4,0}(h) + 4T_{3,1}(h) + 6T_{2,2}(h) + 4T_{1,3}(h) + \right.$$
$$2T_{3,0}(h) + 6T_{2,1}(h) + 6T_{1,2}(h) - 8T_{1,0}(h) + 2T_{0,3}(h) + T_{0,4}(h) -$$
$$\left. 2T_{2,0}(h) - 4T_{1,1}(h) - 2T_{0,2}(h) - 8T_{0,1}(h) - 7T_{0,0}(h)\right]. \qquad (30)$$

$$U_{\alpha,\beta}(9,h) = \frac{1}{\Gamma(9\alpha+1)}\left[T_{4,0}(h) + 4T_{3,1}(h) + 6T_{2,2}(h) + 4T_{1,3}(h) + \right.$$
$$2T_{3,0}(h) + 6T_{2,1}(h) + 6T_{1,2}(h) - 8T_{1,0}(h) + 2T_{0,3}(h) + T_{0,4}(h) -$$
$$\left. 2T_{2,0}(h) - 4T_{1,1}(h) - 2T_{0,2}(h) - 8T_{0,1}(h) - 7T_{0,0}(h)\right]. \qquad (31)$$

The substitution of the results (20), (21), (24)-(31) in (7) yields

$$u(x,t) = \sum_{h=0}^{\infty} t^{\beta h}\left[\left(1 + \frac{x^{\alpha}}{\Gamma(\alpha+1)}\right)T_{0,0}(h) + \left(\frac{x^{2\alpha}}{\Gamma(2\alpha+1)} + \right.\right.$$
$$\left.\frac{x^{3\alpha}}{\Gamma(3\alpha+1)}\right)[T_{1,0}(h) + T_{0,1}(h) - T_{0,0}(h)] + \left(\frac{x^{4\alpha}}{\Gamma(4\alpha+1)} + \frac{x^{5\alpha}}{\Gamma(5\alpha+1)}\right) \times$$
$$[T_{2,0}(h) + 2T_{1,1}(h) + T_{0,2}(h) - 3T_{0,0}(h)] +$$
$$\left(\frac{x^{6\alpha}}{\Gamma(6\alpha+1)} + \frac{x^{7\alpha}}{\Gamma(7\alpha+1)}\right)[T_{3,0}(h) + 3T_{2,1}(h) + 3T_{1,2}(h) + T_{0,3}(h) -$$
$$3T_{1,0}(h) - 3T_{0,1}(h) + T_{2,0}(h) + 2T_{1,1}(h) + T_{0,2}(h) - 5T_{0,0}(h)] +$$
$$\left(\frac{x^{8\alpha}}{\Gamma(8\alpha+1)} + \frac{x^{9\alpha}}{\Gamma(9\alpha+1)}\right)[T_{4,0}(h) + 4T_{3,1}(h) + 6T_{2,2}(h) + 4T_{1,3}(h) +$$
$$2T_{3,0}(h) + 6T_{2,1}(h) + 6T_{1,2}(h) - 8T_{1,0}(h) + 2T_{0,3}(h) + T_{0,4}(h) -$$
$$\left.2T_{2,0}(h) - 4T_{1,1}(h) - 2T_{0,2}(h) - 8T_{0,1}(h) - 7T_{0,0}(h)] + \cdots\right], \qquad (32)$$

that is,

$$u(x,t)=\sum_{h=0}^{\infty}t^{\beta h}\left[\left(1+\frac{x^{\alpha}}{\Gamma(\alpha+1)}+\ldots+\frac{x^{8\alpha}}{\Gamma(8\alpha+1)}+\frac{x^{9\alpha}}{\Gamma(9\alpha+1)}+\ldots\right)\quad\times\right.$$

$$T_{0,0}(h)+\left(\frac{x^{2\alpha}}{\Gamma(2\alpha+1)}+\frac{x^{3\alpha}}{\Gamma(3\alpha+1)}+\ldots+\frac{x^{8\alpha}}{\Gamma(8\alpha+1)}+\frac{x^{9\alpha}}{\Gamma(9\alpha+1)}+\ldots\right)\quad\times$$

$$[T_{1,0}(h)+T_{0,1}(h)-2T_{0,0}(h)]+$$

$$\left(\frac{x^{4\alpha}}{\Gamma(4\alpha+1)}+\frac{x^{5\alpha}}{\Gamma(5\alpha+1)}+\ldots+\frac{x^{8\alpha}}{\Gamma(8\alpha+1)}+\frac{x^{9\alpha}}{\Gamma(9\alpha+1)}+\ldots\right)\quad\times$$

$$[T_{2,0}(h)+2T_{1,1}(h)+T_{0,2}(h)-T_{1,0}(h)-T_{0,1}(h)-2T_{0,0}(h)]+$$

$$\left(\frac{x^{6\alpha}}{\Gamma(6\alpha+1)}+\frac{x^{7\alpha}}{\Gamma(7\alpha+1)}+\frac{x^{8\alpha}}{\Gamma(8\alpha+1)}+\frac{x^{9\alpha}}{\Gamma(9\alpha+1)}+\ldots\right)\quad\times$$

$$[T_{3,0}(h)+3T_{2,1}(h)+3T_{1,2}(h)+T_{0,3}(h)-3T_{1,0}(h)-3T_{0,1}(h)-2T_{0,0}(h)]+$$

$$\left(\frac{x^{8\alpha}}{\Gamma(8\alpha+1)}+\frac{x^{9\alpha}}{\Gamma(9\alpha+1)}+\ldots\right)[T_{4,0}(h)+4T_{3,1}(h)+6T_{2,2}(h)+$$

$$4T_{1,3}(h)+T_{3,0}(h)+3T_{2,1}(h)+3T_{1,2}(h)+T_{0,3}(h)-5T_{1,0}(h)+T_{0,4}(h)-$$

$$\left.5T_{0,1}(h)-3T_{2,0}(h)-6T_{1,1}(h)-3T_{0,2}(h)-2T_{0,0}(h)]+\cdots\right]. \qquad (33)$$

This result can be written as

$$u(x,t)=\sum_{h=0}^{\infty}t^{\beta h}\;T_{0,0}(h)\sum_{k=0}^{\infty}\frac{x^{k\alpha}}{\Gamma(k\alpha+1)}+$$

$$\sum_{h=0}^{\infty}t^{\beta h}\;[T_{1,0}(h)+T_{0,1}(h)-2T_{0,0}(h)]\sum_{k=2}^{\infty}\frac{x^{k\alpha}}{\Gamma(k\alpha+1)}+$$

$$\sum_{h=0}^{\infty}t^{\beta h}\;[T_{2,0}(h)+2T_{1,1}(h)-T_{1,0}(h)-T_{0,1}(h)+T_{0,2}(h)-2T_{0,0}(h)]\quad\times$$

$$\sum_{k=4}^{\infty}\frac{x^{k\alpha}}{\Gamma(k\alpha+1)}+\sum_{h=0}^{\infty}t^{\beta h}\ [T_{3,0}(h)+3T_{2,1}(h)+3T_{1,2}(h)+T_{0,3}(h)-3T_{1,0}(h)-$$

$$3T_{0,1}(h)-2T_{0,0}(h)]\sum_{k=6}^{\infty}\frac{x^{k\alpha}}{\Gamma(k\alpha+1)}+\sum_{h=0}^{\infty}t^{\beta h}\ [T_{4,0}(h)+4T_{3,1}(h)+6T_{2,2}(h)+$$

$$4T_{1,3}(h)+T_{3,0}(h)+3T_{2,1}(h)+3T_{1,2}(h)+T_{0,3}(h)-5T_{1,0}(h)-5T_{0,1}(h)+$$

$$T_{0,4}(h)-3T_{2,0}(h)-6T_{1,1}(h)-3T_{0,2}(h)-2T_{0,0}(h)]\sum_{k=8}^{\infty}\frac{x^{k\alpha}}{\Gamma(k\alpha+1)}+\cdots,$$

and making changes of indexes

$$u(x,t)=\sum_{h=0}^{\infty}t^{\beta h}\ T_{0,0}(h)\sum_{k=0}^{\infty}\frac{x^{k\alpha}}{\Gamma(k\alpha+1)}+x^{2\alpha}\sum_{h=0}^{\infty}t^{\beta h}\quad\times$$

$$[T_{1,0}(h)+T_{0,1}(h)-2T_{0,0}(h)]\sum_{k=0}^{\infty}\frac{x^{k\alpha}}{\Gamma(k\alpha+2\alpha+1)}+x^{4\alpha}\sum_{h=0}^{\infty}t^{\beta h}\,[T_{2,0}(h)+$$

$$2T_{1,1}(h)-T_{1,0}(h)-T_{0,1}(h)+T_{0,2}(h)-2T_{0,0}(h)]\sum_{k=0}^{\infty}\frac{x^{k\alpha}}{\Gamma(k\alpha+4\alpha+1)}+$$

$$x^{6\alpha}\sum_{h=0}^{\infty}t^{\beta h}\ [T_{3,0}(h)+3T_{2,1}(h)+3T_{1,2}(h)+T_{0,3}(h)-3T_{1,0}(h)-3T_{0,1}(h)-$$

$$2T_{0,0}(h)]\sum_{k=0}^{\infty}\frac{x^{k\alpha}}{\Gamma(k\alpha+6\alpha+1)}+x^{8\alpha}\sum_{h=0}^{\infty}t^{\beta h}\ [T_{4,0}(h)+4T_{3,1}(h)+6T_{2,2}(h)+$$

$$4T_{1,3}(h)+T_{3,0}(h)+3T_{2,1}(h)+3T_{1,2}(h)+T_{0,3}(h)-5T_{1,0}(h)-5T_{0,1}(h)+$$

$$T_{0,4}(h)-3T_{2,0}(h)-6T_{1,1}(h)-3T_{0,2}(h)-2T_{0,0}(h)]\sum_{k=0}^{\infty}\frac{x^{k\alpha}}{\Gamma(k\alpha+8\alpha+1)}+\cdots. \tag{34}$$

Now from (34), (4) and (5) we can write

$$u(x,t)=\sum_{h=0}^{\infty}t^{\beta h}\ T_{0,0}(h)\ E_{\alpha}(x^{\alpha})+$$

$$x^{2\alpha}\sum_{h=0}^{\infty} t^{\beta h}\ \left[T_{1,0}(h)+T_{0,1}(h)-2T_{0,0}(h)\right] E_{\alpha,2\alpha+1}(x^{\alpha})+x^{4\alpha}\sum_{h=0}^{\infty} t^{\beta h}\quad\times$$

$$\left[T_{2,0}(h)+2T_{1,1}(h)-T_{1,0}(h)-T_{0,1}(h)+T_{0,2}(h)-2T_{0,0}(h)\right] E_{\alpha,4\alpha+1}(x^{\alpha})+$$

$$x^{6\alpha}\sum_{h=0}^{\infty} t^{\beta h}\ \left[T_{3,0}(h)+3T_{2,1}(h)+3T_{1,2}(h)+T_{0,3}(h)-3T_{1,0}(h)-3T_{0,1}(h)-\right.$$

$$\left.2T_{0,0}(h)\right] E_{\alpha,6\alpha+1}(x^{\alpha})+x^{8\alpha}\sum_{h=0}^{\infty} t^{\beta h}\ \left[T_{4,0}(h)+4T_{3,1}(h)+6T_{2,2}(h)+\right.$$

$$4T_{1,3}(h)+T_{3,0}(h)+3T_{2,1}(h)+3T_{1,2}(h)+T_{0,3}(h)-5T_{1,0}(h)-5T_{0,1}(h)+$$

$$\left.T_{0,4}(h)-3T_{2,0}(h)-6T_{1,1}(h)-3T_{0,2}(h)-2T_{0,0}(h)\right] E_{\alpha,8\alpha+1}(x^{\alpha})+\cdots. \tag{35}$$

Observe that from (19) and (3)

$$\sum_{h=0}^{\infty} T_{i,j}(h)\ t^{\beta h}=(-1)^{ip}(-1)^{jr}\ {}_2\Psi_2\left[\begin{matrix}(\beta ip+\beta jr+1,\beta),(1,1)\\(\beta ip+\beta jr+\gamma,\beta),(1,\beta)\end{matrix};-t^{\beta}\right],$$

therefore,

$$u(x,t)=E_{\alpha}(x^{\alpha})\,E_{\beta,\gamma}(-t^{\beta})+x^{2\alpha}E_{\alpha,2\alpha+1}(x^{\alpha})\quad\times$$

$$\Big\{(-1)^{p}\ {}_2\Psi_2\left[\begin{smallmatrix}(\beta p+1,\beta),(1,1)\\(\beta p+\gamma,\beta),(1,\beta)\end{smallmatrix};-t^{\beta}\right]\ +(-1)^{r}\ {}_2\Psi_2\left[\begin{smallmatrix}(\beta r+1,\beta),(1,1)\\(\beta r+\gamma,\beta),(1,\beta)\end{smallmatrix};-t^{\beta}\right]\ -$$

$$2E_{\beta,\gamma}(-t^{\beta})\ \Big\}+x^{4\alpha}E_{\alpha,4\alpha+1}(x^{\alpha})\Big\{\ {}_2\Psi_2\left[\begin{smallmatrix}(2\beta p+1,\beta),(1,1)\\(2\beta p+\gamma,\beta),(1,\beta)\end{smallmatrix};-t^{\beta}\right]\ +$$

$$2(-1)^{p+r}\ {}_2\Psi_2\left[\begin{smallmatrix}(\beta p+\beta r+1,\beta),(1,1)\\(\beta p+\beta r+\gamma,\beta),(1,\beta)\end{smallmatrix};-t^{\beta}\right]\ -(-1)^{p}\ {}_2\Psi_2\left[\begin{smallmatrix}(\beta p+1,\beta),(1,1)\\(\beta p+\gamma,\beta),(1,\beta)\end{smallmatrix};-t^{\beta}\right]\ -$$

$$(-1)^{r}\ {}_2\Psi_2\left[\begin{smallmatrix}(\beta r+1,\beta),(1,1)\\(\beta r+\gamma,\beta),(1,\beta)\end{smallmatrix};-t^{\beta}\right]\ +\ {}_2\Psi_2\left[\begin{smallmatrix}(2\beta r+1,\beta),(1,1)\\(2\beta r+\gamma,\beta),(1,\beta)\end{smallmatrix};-t^{\beta}\right]\ -$$

$$2E_{\beta,\gamma}(-t^{\beta})\Big\}+x^{6\alpha}E_{\alpha,6\alpha+1}(x^{\alpha})\quad\times$$

$$\Big\{(-1)^{p}\ {}_2\Psi_2\left[\begin{smallmatrix}(3\beta p+1,\beta),(1,1)\\(3\beta p+\gamma,\beta),(1,\beta)\end{smallmatrix};-t^{\beta}\right]\ +$$

$$3(-1)^{r}\ {}_2\Psi_2\left[\begin{smallmatrix}(2\beta p+\beta r+1,\beta),(1,1)\\(2\beta p+\beta r+\gamma,\beta),(1,\beta)\end{smallmatrix};-t^{\beta}\right]\ +3(-1)^{p}\ {}_2\Psi_2\left[\begin{smallmatrix}(\beta p+2\beta r+1,\beta),(1,1)\\(\beta p+2\beta r+\gamma,\beta),(1,\beta)\end{smallmatrix};-t^{\beta}\right]\ +$$

$$(-1)^r\ {}_2\Psi_2\left[{(3\beta r+1,\beta),(1,1)\atop(3\beta r+\gamma,\beta),(1,\beta)};-t^\beta\right]\ -3(-1)^p\ {}_2\Psi_2\left[{(\beta p+1,\beta),(1,1)\atop(\beta p+\gamma,\beta),(1,\beta)};-t^\beta\right]\ -$$

$$3(-1)^r\ {}_2\Psi_2\left[{(\beta r+1,\beta),(1,1)\atop(\beta r+\gamma,\beta),(1,\beta)};-t^\beta\right]\ -2E_{\beta,\gamma}(-t^\beta)\Big\}+x^{8\alpha}E_{\alpha,8\alpha+1}(x^\alpha)\quad\times$$

$$\Big\{\ {}_2\Psi_2\left[{(4\beta p+1,\beta),(1,1)\atop(4\beta p+\gamma,\beta),(1,\beta)};-t^\beta\right]\ +4(-1)^{r+p}\ {}_2\Psi_2\left[{(3\beta p+\beta r+1,\beta),(1,1)\atop(3\beta p+\beta r+\gamma,\beta),(1,\beta)};-t^\beta\right]\ +$$

$$6\ {}_2\Psi_2\left[{(2\beta p+2\beta r+1,\beta),(1,1)\atop(2\beta p+2\beta r+\gamma,\beta),(1,\beta)};-t^\beta\right]\ +4(-1)^{r+p}\ {}_2\Psi_2\left[{(\beta p+3\beta r+1,\beta),(1,1)\atop(\beta p+3\beta r+\gamma,\beta),(1,\beta)};-t^\beta\right]\ +$$

$$(-1)^p\ {}_2\Psi_2\left[{(3\beta p+1,\beta),(1,1)\atop(3\beta p+\gamma,\beta),(1,\beta)};-t^\beta\right]\ +3(-1)^r\ {}_2\Psi_2\left[{(2\beta p+\beta r+1,\beta),(1,1)\atop(2\beta p+\beta r+\gamma,\beta),(1,\beta)};-t^\beta\right]\ +$$

$$3(-1)^p\ {}_2\Psi_2\left[{(\beta p+2\beta r+1,\beta),(1,1)\atop(\beta p+2\beta r+\gamma,\beta),(1,\beta)};-t^\beta\right]\ +(-1)^r\ {}_2\Psi_2\left[{(3\beta r+1,\beta),(1,1)\atop(3\beta r+\gamma,\beta),(1,\beta)};-t^\beta\right]\ -$$

$$5(-1)^p\ {}_2\Psi_2\left[{(\beta p+1,\beta),(1,1)\atop(\beta p+\gamma,\beta),(1,\beta)};-t^\beta\right]\ -5(-1)^r\ {}_2\Psi_2\left[{(\beta r+1,\beta),(1,1)\atop(\beta r+\gamma,\beta),(1,\beta)};-t^\beta\right]\ +$$

$${}_2\Psi_2\left[{(4\beta r+1,\beta),(1,1)\atop(4\beta r+\gamma,\beta),(1,\beta)};-t^\beta\right]\ -3\ {}_2\Psi_2\left[{(2\beta p+1,\beta),(1,1)\atop(2\beta p+\gamma,\beta),(1,\beta)};-t^\beta\right]\ -$$

$$6(-1)^{p+r}\ {}_2\Psi_2\left[{(\beta p+\beta r+1,\beta),(1,1)\atop(\beta p+\beta r+\gamma,\beta),(1,\beta)};-t^\beta\right]\ -3\ {}_2\Psi_2\left[{(2\beta r+1,\beta),(1,1)\atop(2\beta r+\gamma,\beta),(1,\beta)};-t^\beta\right]\ -$$

$$2E_{\beta,\gamma}(-t^\beta)\Big\}+\cdots. \tag{36}$$

As particular case of (36) for $\gamma=1$, using (3)-(4), we obtain

$$u(x,t)=E_\beta(-t^\beta)\ \big\{E_\alpha(x^\alpha)+[(-1)^p+(-1)^r-2]\ x^{2\alpha}E_{\alpha,2\alpha+1}(x^\alpha)+$$

$$[2(-1)^{p+r}-(-1)^p-(-1)^r]\ x^{4\alpha}E_{\alpha,4\alpha+1}(x^\alpha)+$$

$$[(-1)^p+(-1)^r-2]\ x^{6\alpha}E_{\alpha,6\alpha+1}(x^\alpha)+$$

$$[2(-1)^{p+r}-(-1)^p-(-1)^r]\ x^{8\alpha}E_{\alpha,8\alpha+1}(x^\alpha)+\cdots\big\}. \tag{37}$$

Special Cases: From (37) we get

i) If p and r are even:

$$u(x,t)=E_\alpha(x^\alpha)\ E_\beta(-t^\beta) \tag{38}$$

which was given by Garg et al. [14].

ii) If p and r are odd:

$$u(x,t) = E_\beta(-t^\beta)\ \{E_\alpha(x^\alpha) - 4x^{2\alpha}E_{\alpha,2\alpha+1}(x^\alpha) + 4x^{4\alpha}E_{\alpha,4\alpha+1}(x^\alpha) - 4x^{6\alpha}E_{\alpha,6\alpha+1}(x^\alpha) + 4x^{8\alpha}E_{\alpha,8\alpha+1}(x^\alpha) - \cdots\}. \tag{39}$$

iii) If $p+r$ is odd:

$$u(x,t) = E_\beta(-t^\beta)\ \{E_\alpha(x^\alpha) - 2x^{2\alpha}E_{\alpha,2\alpha+1}(x^\alpha) - 2x^{4\alpha}E_{\alpha,4\alpha+1}(x^\alpha) - 2x^{6\alpha}E_{\alpha,6\alpha+1}(x^\alpha) - 2x^{8\alpha}E_{\alpha,8\alpha+1}(x^\alpha) - \cdots\}. \tag{40}$$

On the other hand, for $\alpha = 1$ and $\gamma = 1$, (12) reduces to non-homogeneous time fractional telegraph equation:

$$D_x^2 u(x,t) = D_t^{p\beta}u(x,t) + D_t^{r\beta}u(x,t) + u(x,t) - 2e^x E_\beta(-t^\beta), \tag{41}$$

$$0 < x < 1, \quad t > 0$$

with initial conditions

$$u(0,t) = E_\beta(-t^\beta), \qquad D_x u(0,t) = E_\beta(-t^\beta)$$

whose solution, for p and r even, according to (38) is $u(x,t) = e^x E_\beta(-t^\beta)$ [14].

4 Graphic Representation

In this section some figures, which show the behavior of the solution $u(x,t)$ for $0 < x < 1$, $0 < t < 5$ and different values of the parameters, are presented. The Figure 1 and the Figure 4 show the effect of γ on $u(x,t)$, when $\alpha = 0.8$, $\beta = 1/3$, $p = 4$, $r = 2$ and γ changes from 0.5 to 1. Idem for the Figure 2 and the Figure 5 when $\alpha = 0.75$, $\beta = 0.25$, $p = 5$, $r = 3$ and γ changes from 2 to 1. Idem for the Figure 3 and the Figure 6 when $\alpha = 0.6$, $\beta = 0.5$, $p = 4$, $r = 1$ and γ varies from 2.5 to 1.

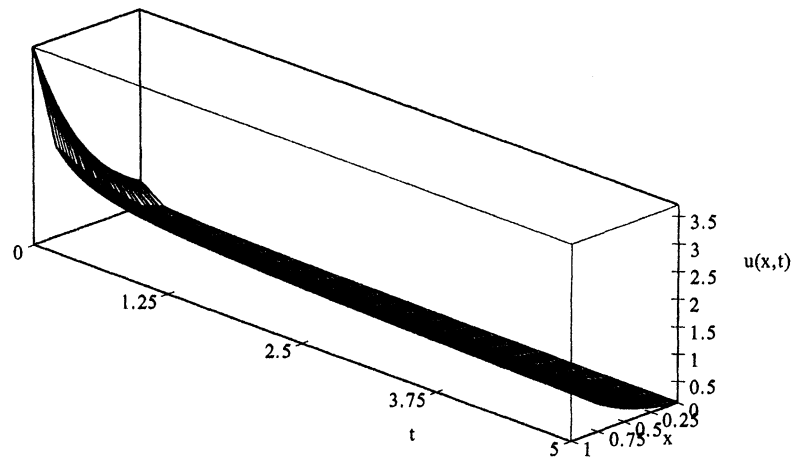

Figure 1. $u(x,t)$ for $p = 4,\ r = 2,\ \alpha = 0.8,\ \beta = 1/3,\ \gamma = 0.5$

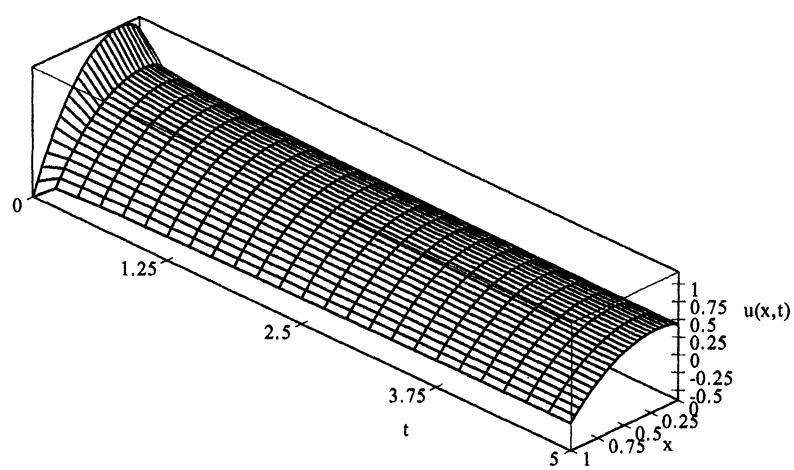

Figure 2. $u(x,t)$ for $p = 5,\ r = 3,\ \alpha = 0.75,\ \beta = 0.25,\ \gamma = 2$

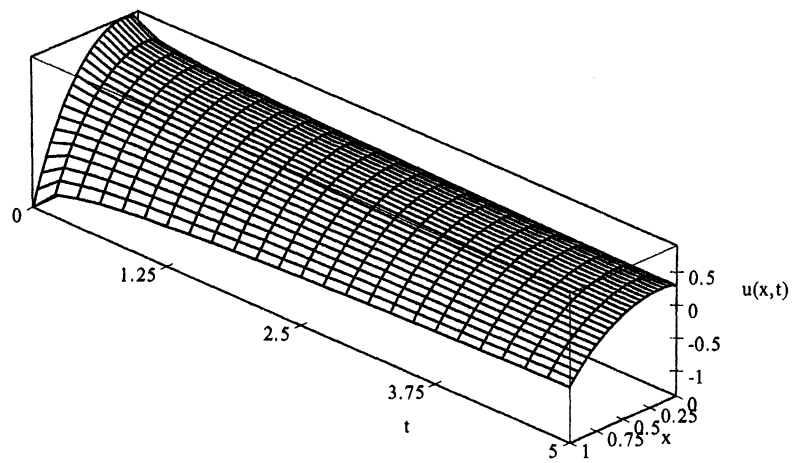

Figure 3. $u(x,t)$ for $p = 4,\ r = 1,\ \alpha = 0.6,\ \beta = 0.5,\ \gamma = 2.5$

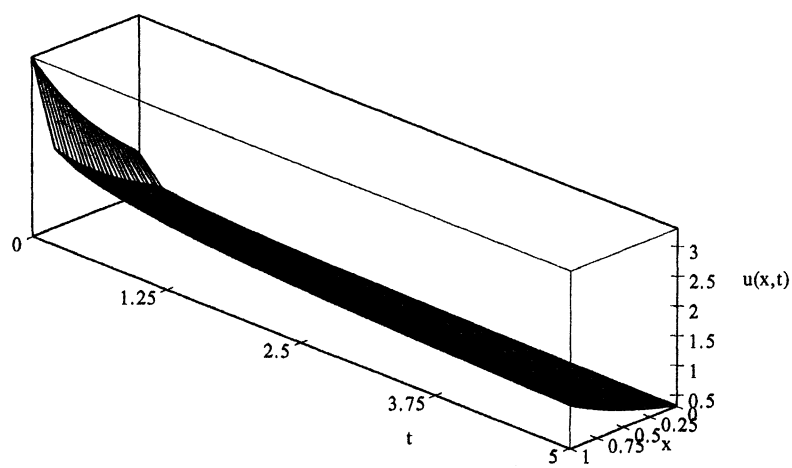

Figure 4. $u(x,t)$ for p and r even, $\alpha = 0.8$, $\beta = 1/3$, $\gamma = 1$

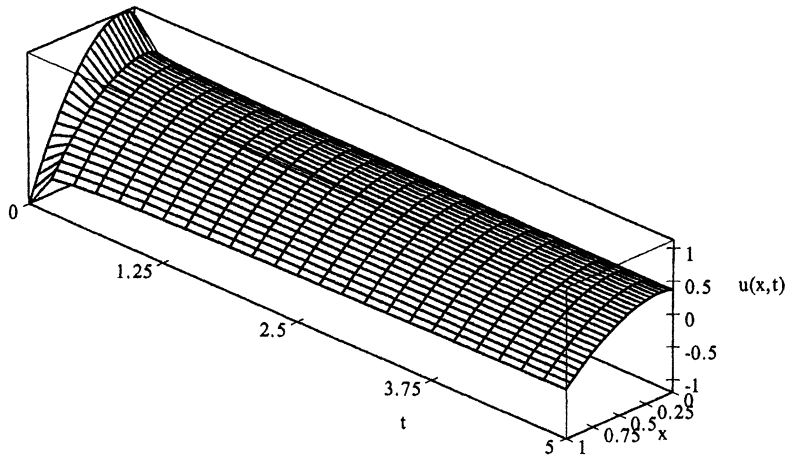

Figure 5. $u(x,t)$ for p and r odd, $\alpha = 0.75$, $\beta = 0.25$, $\gamma = 1$

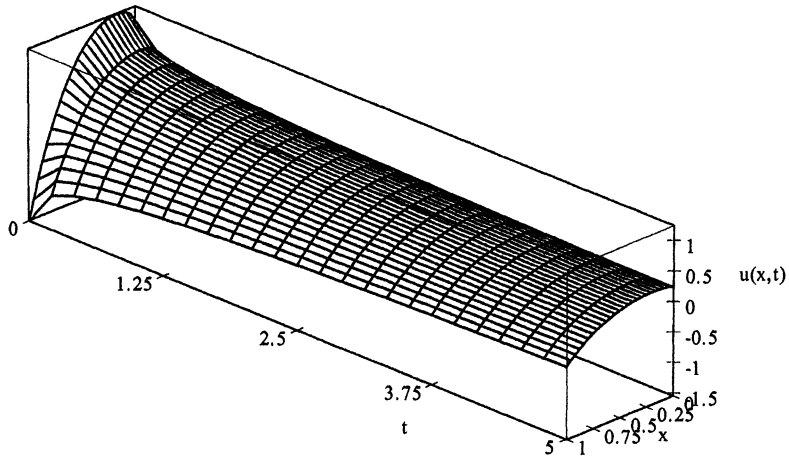

Figure 6. $u(x,t)$ for $p + r$ odd, $\alpha = 0.6$, $\beta = 0.5$, $\gamma = 1$

Acknowledgement

The author would like to thanks to CONDES-Universidad del Zulia for financial support.

References

[1] J. Biazar, H. Ebrahimi and Z. Ayati, An approximation to the solution of telegraph equation by variational iteration method, Numerical Methods for Partial Differential Equations 25 (4) (2009), 797-801.

[2] M. Caputo, Elasticita e Dissipazione, Zanichelli, Bologna, Italy, 1969.

[3] R. C. Cascaval, E. C. Eckstein, C. L. Frota and J. A. Goldstein, Fractional telegraph equations, Journal of Mathematical Analysis and Applications 276 (1) (2002), 145-159, http://www.sciencedirect.com.

[4] S. Das, K. Vishal, P. K. Gupta and A. Yildirim, An approximate analytical solution of time-fractional telegraph equation, Applied Mathematics and Computation 217 (18) (2011), 7405–7411.

[5] L. Debnath, Nonlinear Partial Differential Equations for Scientists and Engineers, Birkhäuser, Boston, Mass, USA, 1997.

[6] M. Dehghan, S. A. Yousefi and A. Lotfi, The use of He's variational iteration method for solving the telegraph and fractional telegraph equations, Int. J. Numer. Meth. Biomed. Engng. 27 (2) (2011), 219–231, doi: 10.1002/cnm.1293.

[7] E. C. Eckstein, J. A. Goldstein and M. Leggas, The mathematics of suspensions: Kac walks and asymptotic analyticity, Electronic Journal of Differential Equations, Conference 03 (1999), 39–50.

[8] E. C. Eckstein, M. Leggas, B. Ma and J. A. Goldstein, Linking theory and measurements of tracer particle position in suspension flows, Proc. ASME FEDSM 251 (2000), 1–8.

[9] M. S. El-Azab and M. El-Gamel, A numerical algorithm for the solution of telegraph equation, Applied Mathematics and Computation 190 (1) (2007), 757-764.

[10] R. Figueiredo, A. O. Chiacchio and E. Capelas de Oliveira, Differentiation to fractional orders and the fractional telegraph equation, Journal of Mathematical Physics 49 (3) (2008), 1-12, http://dx.doi.org/10.1063/1.2890375.

[11] N. J. Ford, M. M. Rodrigues, J. Xiao and Y. Yan, Numerical analysis of a two-parameter fractional telegraph equation, Journal of Computational and Applied Mathematics 249 (2013), 95–106.

[12] L. Galué, Solution of some fractional order telegraph equations, Revista Colombiana de Matemáticas 48 (2) (2014), 247-267.

[13] F. Gao and C. Chi, Unconditionally stable difference scheme for a one-space dimensional linear hyperbolic equation, Applied Mathematics and Computation 187 (2) (2007), 1272-1276.

[14] M. Garg, P. Manohar and S. L. Kalla, Generalized differential transform method to space-time fractional telegraph equation, International Journal of Differential Equations 2011, 1-9, doi:10.1155/2011/548982.

[15] M. Garg and A. Sharma, Solution of space-time fractional telegraph equation by Adomian decomposition method, Journal of Inequalities and Special Functions 2 (1) (2011), 1-7, http://www.ilirias.com.

[16] G. Hariharan, R. Rajaraman and M. Mahalakshmi, Wavelet method for a class of space and time fractional telegraph equations, International Journal of Physical Sciences 7 (10) (2012), 1591-1598,http://www.academicjournals.org/IJPS, doi: 10.5897/IJPS11.1294.

[17] U. Hayat and S. T. Mohyud-Din, Homotopy perturbation technique for time-fractional telegraph equations, International Journal of Modern Theoretical Physics 2 (1) (2013), 33-41.

[18] F. Huang, Analytical solution for the time-fractional telegraph equation, Journal of Applied Mathematics 2009, 1-9, doi:10.1155/2009/890158.

[19] K. Karimi, A. Niroomand, M. Khaksarfard and L. Gharacheh, On the numerical solutions for the time-fractional telegraph equation, International Journal of Electronics Communication and Computer Engineering 4 (1) (2013), 117-121.

[20] D. Kaya, A new approach to the telegraph equation: An application

of the decomposition method, Bulletin of the Institute of Mathematics, Academia Sinica 28 (1) (2000), 51-57.
[21] M. Leggas, Biomedical Engineering, Thesis, University of Tennessee Health Sciences Center, Memphis, TN, 1999.
[22] F. Mainardi, Fractional calculus: Some basic problems in continuum and statistical mechanics, in: A. Carpinteri, F. Mainardi (Eds.), Fractal and Fractional Calculus in Continuum Mechanics, Springer-Verlag 378, New York, USA, 1997.
[23] A. C. Metaxas and R. J. Meredith, Industrial Microwave Heating, Peter Peregrinus, London, UK, 1993.
[24] G. M. Mittag-Leffler, Sur la nouvelle fonction $E_\alpha(x)$, Comptes Rendus de l' Académie des Sciences Paris 137 (1903), 554–558.
[25] S. Momani, Analytic and approximate solutions of the space and time fractional telegraph equations, Applied Mathematics and Computation 170 (2) (2005), 1126-1134.
[26] S. Momani, Z. Odibat and V. S. Erturk, Generalized differential transform method for solving a space- and time -fractional diffusion-wave equation, Physics Letters A 370 (5-6) (2007), 379–387.
[27] Z. Odibat and S. Momani, A generalized differential transform method for linear partial differential equations of fractional order, Applied Mathematics Letters 21 (2) (2008), 194-199, http://www.science direct.com.
[28] Z. Odibat, S. Momani and V. S. Erturk, Generalized differential transform method: Application to differential equations of fractional order, Applied Mathematics and Computation 197 (2) (2008), 467–477.
[29] E. Orsingher and L. Beghin, Time-fractional telegraph equations and telegraph processes with brownian time, Probability Theory and Related Fields 128 (1) (2004), 141-160.
[30] E. Orsingher and X. Zhao, The space-fractional telegraph equation and the related fractional telegraph process, Chinese Annals of Mathematics Series B 24 (1) (2003), 45-56.
[31] I. Podlubny, Fractional Differential Equations, Academic Press, New York, 1999.
[32] A. Sevimlican, An approximation to solution of space and time frac-

tional telegraph equations by He's variational iteration method, Mathematical Problems in Engineering 2010, 1-10, doi:10.1155/2010/290631.
[33] H.M. Srivastava and Per W. Karlsson, Multiple Gaussian Hypergeometric Series, Jhon Wiley & Sons, New York, 1985.
[34] V. A. Vyawahare and P. S. V. Nataraj, Analysis of fractional-order telegraph model for neutron transport in nuclear reactor with slab geometry, 2013 European Control Conference (ECC), July 17-19, 2013, Zürich, Switzerland, pp. 3476-3481.
[35] A. Wiman, Über den fundamentalsatz in der teorie der funktionen $E_\alpha(x)$, Acta Mathematica 29 (1) (1905), 191–201.
[36] Z. Xindong, L. Juan and W. Leilei, An approximate analytical solution for time-fractional telegraph equation by HPM, Journal of Computational Intelligence and Electronic Systems 1 (1) (2012), 48-53, http://dx.doi.org/10.1166/jcies.
[37] S. Yakubovich and M. M. Rodrigues, Fundamental solutions of the fractional two-parameter telegraph equation, Integral Transforms and Special Functions 23 (7) (2012), 509–519.
[38] A. Yildrim, He's homotopy perturbation method for solving the space and time fractional telegraph equations, International Journal of Computer Mathematics 87 (13) (2010), 2998-3006.

HADRONIC JOURNAL 39, 169 - 173 (2016)

ENERGY MOMENTUM IN GENERAL RELATIVITY

Kenneth Dalton
General Delivery
Bang Saphan Yai 77140
Prachuap Kiri Khan
Thailand
kxdalton@yahoo.com

Received April 26, 2016

Abstract

It is first shown that there is no exchange of energy-momentum during planetary motion. Then, starting with the field equations, it is shown that the gravitational field does not exchange energy-momentum with any form of matter. Conclusion: In general relativity, there is no gravitational energy, momentum, stress, force or power.

Copyright © 2016 by Hadronic Press, Inc., Palm Harbor, FL 34684, USA

1 The energy-momentum vector

In the theory of general relativity, planetary motion is described by the geodesic equation [1]

$$\frac{du^\mu}{ds} + \Gamma^\mu_{\nu\lambda} u^\nu u^\lambda = 0 \tag{1}$$

where $u^\mu = dx^\mu/ds$ and

$$\Gamma^\mu_{\nu\lambda} = \frac{1}{2} g^{\mu\rho}\Big(\frac{\partial g_{\nu\rho}}{\partial x^\lambda} + \frac{\partial g_{\rho\lambda}}{\partial x^\nu} - \frac{\partial g_{\nu\lambda}}{\partial x^\rho}\Big) \tag{2}$$

are the connection coefficients. The energy-momentum of the planet is given by ($c = 1$) [2]

$$\mathbf{p} = m\mathbf{u} \tag{3}$$

and the question arises as to the rate of change of this four-vector. Expand $\mathbf{u} = \mathbf{e}_\mu u^\mu$ where the basis satisfies [3]

$$\nabla_\nu \mathbf{e}_\mu = \mathbf{e}_\lambda \Gamma^\lambda_{\mu\nu} \tag{4}$$

It follows that

$$\begin{aligned} \frac{d\mathbf{p}}{ds} &= m\frac{d}{ds}(\mathbf{e}_\mu u^\mu) = m\Big\{\mathbf{e}_\mu \frac{du^\mu}{ds} + \frac{d\mathbf{e}_\mu}{ds} u^\mu\Big\} \\ &= m\,\mathbf{e}_\mu\Big\{\frac{du^\mu}{ds} + \Gamma^\mu_{\nu\lambda} u^\nu u^\lambda\Big\} \end{aligned} \tag{5}$$

where $d\mathbf{e}_\mu = \mathbf{e}_\lambda \Gamma^\lambda_{\mu\nu} dx^\nu$. In light of the geodesic equation,

$$\frac{d\mathbf{p}}{ds} = 0 \tag{6}$$

The meaning of this equation may be stated in several ways:
(1) The energy-momentum of the planet does not change, as it moves along the geodesic path.
(2) There is no transfer of energy-momentum to or from the planet.
(3) There is no exchange of energy-momentum with the gravitational field.
In the following section, this result will be extended to include all forms of matter.

2 The stress-energy-momentum tensor

In the theory of special relativity, conservation of energy-momentum is expressed by the Lorentz covariant equation

$$\frac{\partial T^{\mu\nu}}{\partial x^\nu} = 0 \tag{7}$$

This is a *differential* law, involving the flow of energy-momentum through an infinitesimal region. The equation is valid for any form of matter which has a well-defined stress-energy-momentum tensor $T^{\mu\nu}$. Finally, the coordinate system must be inertial and rectangular, $x^\mu = (x^0, x, y, z)$. However, suppose that the rectangular coordinates are replaced with ordinary spherical coordinates, $x^{\mu'} = (x^0, r, \theta, \phi)$. What will be the correct equation in the new coordinate system? To answer this question, begin with equation (7) and substitute the transformed quantities

$$T^{\mu\nu} = \frac{\partial x^\mu}{\partial x^{\alpha'}} \frac{\partial x^\nu}{\partial x^{\beta'}} T^{\alpha'\beta'} \qquad\qquad \frac{\partial}{\partial x^\nu} = \frac{\partial x^{\gamma'}}{\partial x^\nu} \frac{\partial}{\partial x^{\gamma'}} \tag{8}$$

This yields

$$\begin{aligned}
\frac{\partial T^{\mu\nu}}{\partial x^\nu} &= \frac{\partial x^{\gamma'}}{\partial x^\nu} \frac{\partial}{\partial x^{\gamma'}} \left\{ \frac{\partial x^\mu}{\partial x^{\alpha'}} \frac{\partial x^\nu}{\partial x^{\beta'}} T^{\alpha'\beta'} \right\} \\
&= \frac{\partial x^\mu}{\partial x^{\alpha'}} \left\{ \frac{\partial T^{\alpha'\beta'}}{\partial x^{\beta'}} + \frac{\partial^2 x^\nu}{\partial x^{\beta'} \partial x^{\gamma'}} \frac{\partial x^{\gamma'}}{\partial x^\nu} T^{\alpha'\beta'} + \frac{\partial^2 x^\nu}{\partial x^{\beta'} \partial x^{\gamma'}} \frac{\partial x^{\alpha'}}{\partial x^\nu} T^{\gamma'\beta'} \right\} \\
&= 0
\end{aligned} \tag{9}$$

The connection coefficients transform according to the formula [4]

$$\Gamma^{\alpha'}_{\beta'\gamma'} = \frac{\partial x^{\alpha'}}{\partial x^\mu} \frac{\partial x^\nu}{\partial x^{\beta'}} \frac{\partial x^\lambda}{\partial x^{\gamma'}} \Gamma^\mu_{\nu\lambda} + \frac{\partial^2 x^\nu}{\partial x^{\beta'} \partial x^{\gamma'}} \frac{\partial x^{\alpha'}}{\partial x^\nu} \tag{10}$$

For rectangular coordinates, $\Gamma^\mu_{\nu\lambda} = 0$, and it follows that

$$\frac{\partial T^{\mu\nu}}{\partial x^\nu} = \frac{\partial x^\mu}{\partial x^{\alpha'}} \left\{ \frac{\partial T^{\alpha'\beta'}}{\partial x^{\beta'}} + \Gamma^{\gamma'}_{\beta'\gamma'} T^{\alpha'\beta'} + \Gamma^{\alpha'}_{\beta'\gamma'} T^{\gamma'\beta'} \right\} = 0 \tag{11}$$

The expression in brackets is the covariant divergence $T^{\alpha'\beta'}_{;\beta'}$. This proves that

$$T^{\alpha'\beta'}_{;\beta'} = 0 \tag{12}$$

is the law of energy-momentum conservation in the spherical coordinate system. QED

The generally covariant law of conservation holds true, not only for spherical coordinates, but for *all* systems of coordinates. It will now be applied to the field equations

$$R^{\mu\nu} - \frac{1}{2}\, g^{\mu\nu} R = -\frac{8\pi G}{c^4}\, T^{\mu\nu} \tag{13}$$

where $T^{\mu\nu}$ represents any form of matter. The covariant divergence of the left-hand side is identically zero [5], therefore the energy-momentum of matter is conserved

$$T^{\mu\nu}_{;\nu} = 0 \tag{14}$$

There is no exchange of energy-momentum with the gravitational field.

3 Conclusion

The consequences of the planetary equation $d\mathbf{p}/ds = 0$ are unmistakable. They can be summarized by saying that the gravitational field does not interact dynamically with a planet. This is a particular case of the general result stated below.

The proof of the energy-momentum conservation law, $T^{\mu\nu}_{;\nu} = 0$, is new. This law was explicitly rejected in the past [6-8], which gave rise to a host of ambiguous claims in the literature. Therefore, the proof given here is a crucial step forward. It makes the truth of this law abundantly clear. When combined with the field equations, it shows that the gravitational field is free of all dynamical interaction with matter.

Thus, there is no gravitational energy, momentum, stress, force or power. The field is purely geometric in character, comprising the metric tensor, the geodesic equation, the curvature tensor, etc. It is a four-dimensional extension of force-free Newtonian motion. [9,10]

It is fitting to close with a quotation from Einstein:

> "The general laws of nature are to be expressed by equations which hold good for all systems of coordinates, that is, are covariant with respect to any substitutions whatever (generally covariant)." [11]

References

[1] C. Misner, K. Thorne, and J. Wheeler, *Gravitation*, Freeman, New York, (1973) page 262.
[2] Ref. 1, page 53.
[3] Ref. 1, page 259.
[4] S. Weinberg, *Gravitation and Cosmology*, Wiley, New York, (1972) page 100.
[5] Ref. 4, page 147.
[6] A. Einstein, The Foundation of the General Theory of Relativity in *The Principle of Relativity*, Dover, New York, (1952) section 18.
[7] L. Landau and E. Lifshitz, *The Classical Theory of Fields*, Pergamon, Elmsford, 4th ed., (1975) section 96.
[8] P. Bergmann, *Introduction to the Theory of Relativity*, Dover, New York, (1976) page 194.
[9] K. Dalton, Manifestly Covariant Relativity, Hadronic J. **17**(1994)139.
[10] K. Dalton, Energy and Momentum in General Relativity, Gen.Rel.Grav. **21**(1989)533.
[11] Ref. 6, section 3.

HADRONIC JOURNAL 39, 175 - 180 (2016)

GRAVITATIONALLY INDUCED CHIRAL CURRENT AND MASS GENERATION

Sergey N. Andrianov
Institute of Advanced Research
Academy of Sciences of the Republic of Tatarstan, Russia
adrianovsn@mail.ru
Rinat A. Daishev
Department of Physics, Kazan Federal University, Russia
Sergey M. Kozyrev
Scientific center for gravity wave studies "Dulkyn", Kazan, Russia

Received May 25, 2016

Abstract

Klein-Gordon equation is derived for a particle in the brane model of Universe. It is compared with squared Dirac-Fock-Ivanenko equation and expression for a chiral current is obtained by this comparison. This expression defines chiral current through variation of spin connection gauge field that arises due to the symmetry in respect to local Lorenz transformations. So, the second derivative of gravitational gauge field determines variation of chiral current responsible for variation of mass. The role of these processes on the early stages of Universe evolution is discussed.

Copyright © 2016 by Hadronic Press, Inc., Palm Harbor, FL 34684, USA

1 Introduction

The evolution of particles in curved space can be described by generalized Klein-Gordon (KG) equation derived by Schrödinger [1]. KG equation in the same form was derived within brane model in paper [2] and thus it can be valid just after Big Bang and brane formation. But KG equation does not properly describe probability features of wave function. Besides, it properly describes position of particle in space but gives the solutions not only with positive time flaw but, also, with negative one. Therefore, motion of particles in our nowadays Universe with definite direction of local time flaw must be described by Dirac equation. Its generalization in curved space is named Dirac-Fock-Weyl (DFW) equation [3, 4] or in other notations Dirac-Fock-Ivanenko (DFI) equation [3, 5, 6].

Comparison of KG equation with squared DFW equation was performed in paper [7]. But spin connection in DFW equation was changed with that by some indefinite scalar matrix which quadrate was also included in KG equation therein. We perform here rigorous comparison of KG equation in its original form [1] with squared DFI equation and obtain formula for chiral current. Finally, we discuss generation of mass connected with chiral current variation on early stages of Universe evolution.

2 Squared Dirac-Fok-Ivanenko equation

We have derived KG equation for a brane that has the following form [2]:

$$g^{ij}\nabla_i\nabla_j\psi = \left\{\frac{1}{4}R - \left(\frac{mc}{\hbar}\right)^2\right\}\psi, \tag{1}$$

coinciding with that of [1], where ∇_i is covariant derivative, R is curvature, m is mass of a particle. Let's consider, also, DFI equation

$$i\gamma^i(\nabla_i + \Gamma_i)\psi = m\psi \tag{2}$$

with Dirac gamma matrixes γ^i and spin connection Γ_i. Squaring of this equation yields

$$\begin{aligned}(\gamma^i\gamma^j\nabla_i\nabla_j + \left(\gamma^i(\nabla_i\gamma^j) + \gamma^i\{\Gamma_i, \gamma^j\}\right)\nabla_j + \\ +\gamma^i\nabla_i(\gamma^j\Gamma_j) + (\gamma^i\Gamma_i)(\gamma^j\Gamma_j))\psi = -m^2\psi.\end{aligned} \tag{3}$$

If

$$\frac{1}{2}\{\gamma^i, \gamma^j\} = g^{ij}, \tag{4}$$

$$\gamma^i(\partial_i\gamma^j) + \{(\gamma^i\Gamma_i), \gamma^j\} = 0 \tag{5}$$

and

$$\gamma^i\nabla_i(\gamma^j\Gamma_j) + (\gamma^i\Gamma_i)(\gamma^j\Gamma_j) = -\frac{1}{4}R \tag{6}$$

we come to Klein-Gordon equation (1)

Relations (4, 5) coincide with that of [7]. Taking into account expression from [8]

$$\partial_i \gamma^j + [\Gamma_i, \gamma^j] + \Gamma^j_{ik}\gamma^k = 0 \tag{7}$$

we come as in [7] from (4) and (5) to the following relation between spin connection and Cristoffel symbol.

$$\Gamma_i = \frac{1}{2} g^{ik}\Gamma^j_{ik}. \tag{8}$$

Lets consider relation (6). Using (7) again we get

$$\gamma^i\gamma^j\nabla_i\Gamma_j + \gamma^i\gamma^j\Gamma_i\Gamma_j = -\frac{1}{4}R, \tag{9}$$

where $\nabla_i\Gamma_j = \partial_i\Gamma_j - \Gamma^j_{ik}\Gamma_k$. Therefore, we obtain that

$$\gamma^i\gamma^j D_i\Gamma_j = -\frac{1}{4}R \tag{10}$$

where $D_i = \nabla_i + \Gamma_i$ is generalized covariant derivative.

3 Chiral current.

Lets consider the first term in (10). It can be decomposed into commutator and anticomutator parts

$$\gamma^i\gamma^j D_i\Gamma_j = \frac{1}{2}\{\gamma^i, \gamma^j\}D_i\Gamma_j + \frac{1}{2}[\gamma^i, \gamma^j]\left(\frac{1}{2}(D_i\Gamma_j + D_j\Gamma_i) + \frac{1}{2}(D_i\Gamma_j - D_j\Gamma_i)\right). \tag{11}$$

It can be rewritten as

$$\gamma^i\gamma^j D_i\Gamma_j = g^{ij}D_i\Gamma_j + \frac{1}{4}[\gamma^i, \gamma^j]\left(\nabla_i\Gamma_j - \nabla_j\Gamma_i + \Gamma_i\Gamma_j - \Gamma_j\Gamma_i\right). \tag{12}$$

Introducing spin curvature

$$\Phi_{ij} = \nabla_i\Gamma_j - \nabla_j\Gamma_i + \Gamma_i\Gamma_j - \Gamma_j\Gamma_i = D_i\Gamma_j - D_j\Gamma_i. \tag{13}$$

we get from (12) the expression

$$[\gamma^i, \gamma^j]\Phi_{ij} \quad = \quad -4g^{ij}D_i\Gamma_j - R \tag{14}$$

that can be used for determination of $[\gamma^i, \gamma^j]$.

Another variant of this formula is derived as following. Spin curvature can be expressed as [8]

$$\Phi_{ij} \quad = \quad -\frac{1}{8}[\gamma^l, \gamma^k]R_{ijlk}. \tag{15}$$

Substitution of (15) into (14) gives

$$\left(\frac{1}{8}[\gamma^i,\gamma^j][\gamma^l,\gamma^k]-\frac{1}{4}\{\gamma^j,\gamma^k\}\{\gamma^i,\gamma^l\}\right)R_{ijlk}=4g^{ij}D_i\Gamma_j. \tag{16}$$

Using symmetry properties of metric tensor and Bianki identity we get

$$\gamma^i\gamma^j\gamma^k\gamma^l R_{iljk}=4g^{ij}D_i\Gamma_j, \tag{17}$$

The left hand side of (17) can be rewritten as

$$\gamma^i\gamma^j\gamma^k\gamma^l R_{iljk}=\delta^{ijps}_{klmn}\gamma^k\gamma^l\gamma^m\gamma^n R_{isjp}, \tag{18}$$

where tensor δ^{ijps}_{klmn} is the generalized Kronecker symbol. Further, we use the identity

$$\delta^{ijps}_{klmn}=\frac{1}{4!}\varepsilon^{ijps}\varepsilon_{klmn} \tag{19}$$

substituting it in (18) to get

$$\gamma^i\gamma^j\gamma^k\gamma^l R_{iljk}=-i\gamma^5\widetilde{R}, \tag{20}$$

where

$$\gamma^5=\frac{i}{4!}\varepsilon_{klmn}\gamma^k\gamma^l\gamma^m\gamma^n \tag{21}$$

and

$$\widetilde{R}=\varepsilon^{ijps}R_{ijps}. \tag{22}$$

Eventually, we get from (17) and (20) the following expression for γ^5:

$$\gamma^5=4i\widetilde{R}^{-1}g^{ij}D_i\Gamma_j \tag{23}$$

or

$$\gamma^5=4i\widetilde{R}^{-1}D_i\Gamma^i. \tag{24}$$

γ^5 can be used for the determination of chiral spin current according to the formula

$$\gamma^{k5}=\overline{\psi}\gamma^k\gamma^5\psi, \tag{25}$$

where ψ is spinor wave function. Substitution of (24) into (25) yields

$$j^{k5}=4i\overline{\psi}\gamma^k\widetilde{R}^{-1}D_i\Gamma^i\psi. \tag{26}$$

Spin connection in equation (26) can be regarded as gauge gravitational field related to the symmetry of local Lorenz transformations. $D_i\Gamma^i$ in (26) is gravitational force. When the brane radius exceeds critical value gravitational force supporting the quark-gluon brane [9, 10] becomes weaker than the influence of strong interaction and quarks combine into separate elementary particles. Variation of chiral current describes generation of mass when quarks combine producing the particles. So, variation of our chiral current is connected with creation and decay of elementary particles on the background of strongly varying gravitational field in the early Universe.

4 Conclusion

Thus, we have considered Klein-Gordon equation for a particle on brane derived by us earlier using variation principle. Solutions of Klein-Gordon equation have time reversal symmetry and thus brane after its emergence due Big Bang supported this symmetry. But then this symmetry was spontaneously broken and we must deal now with Dirac equation. However, time reversing symmetry breaking still does not yield definite time arrow. The result of this symmetry breaking is the emergence of particl's spin that can be considered as rotation of particle in extra dimension. Particle can not move already in additional dimension because of space compactification but it can rotate in it. Massive particle rotating in extra dimension produces gravitational field on brane and thus spin connectivity through this field.

Spin projection on momentum direction defines helicity of the particle that coincides with chirality for massless particles. No coordinate transformation can change the helicity of massless particle since no physical body can move faster than light. So, particle can exist simultaneously in local times τ and $-\tau$ for any given value of brane radius that can be regarded as global time since these states do not mix. In the case of massive particles, helicity coincides with chirality only when the symmetry to parity transformations is valid for a particle. Here, coordinate transformation can change the sign of spin projection on particle's momentum direction but parity transformation (inversion of coordinates) returns it back. So, particle can again be simultaneously characterized by two contra-directional local times. Only chiral symmetry breaking leads eventually to collision of local times τ and $-\tau$ and formation of time arrow with definite time t. With that, inertial mass of the particle becomes larger because now the particle does not experience free evolution with times τ and $-\tau$ but evolution in definite time t with a process of time arrow formation.

Squaring Dirac-Fock-Ivanenko equation gives Klein-Gordon equation. We have derived the expression for gamma five matrix through the derivative of spin connection by the comparison of squared DFI equation with KG equation and used it for determination of chiral spin current. This chiral spin current is anomalous spin current corresponding to spontaneous chiral symmetry breaking of mass particle in the space of DFI equation solutions [11]. Its variation describes creation and decay of massive particles and is connected with variation of gravitational gauge field that could be rather intensive in early Universe. Generation of mass is one of crucial steps in the evolution of early Universe. 99 percents of nucleon mass comes out of light quarks combination in more heavy hadrons as a result of this chiral symmetry breaking.

References

[1] E. Schr¨odinger *Uber die kr¨aftefreie Bewegung in der relativistischen Quan-¨ tenmechanik*(in German), Sitz.ber.Preuss. Akad. Wiss. Phys.-Math. Kl. (Berliner Berichte) 24, (1930); Schr¨odinger E. *Diracsches Elektron im Schwerfeld. I.*(in German), Sitz. Ber. Preuss.Akad. Wiss. Berlin. Phys.-Math Kl., Bd. 11. S., (1932), 105 - 128.

[2] S.N. Andrianov, R.A. Daishev, S.M. Kozyrev, *Klein-Gordon Equation for a Particle in Brane Model*, Global Journal of Science Frontier Research: A, Physics and Space Science, Vol 13, No 8-A (2013).

[3] V. A. Fock. *Geometrisierung der Diracschen Theorie des Elektrons* (in German), Z. Phys. 57, (1929), 261-277.

[4] H. Weyl. *Electron and gravitation* (in German), Z. Phys. 56, (1929), 330352.

[5] V. A. Fock, D., Ivanenko. *Uber eine mogliche geometrische Deutung dcr relattvistischen Quantentheorle (On a possible geometric interpretation of relativistic quantum theory)*(in German). Zs. Phys., Bd. 54, N 11-12, S.798802, (1929).

[6] V. A. Fock, D., Ivanenko. *Zur Quantengeometrie. (To quantum geometry)*(in German), Phys.Zs., Jg. 30, N 19, (1929), S. 648-651, .

[7] A. D. Alhaidari and A. Jellal. *Dirac and Klein-Gordon Equations in Curved Space*, arXiv: 1106.2236, (2011).

[8] H. A. Weldon. *Fermions without vierbeins in curved space-time.* Phys. Rev., D V.63, No.10, (2001), P.104010.

[9] Giuseppe De Risi, Tiberiu Harko, Francisco S. N. Lobo and Chun Shing Jason, *Quark-Hadron Phase Transitions in Brane-World Cosmologies*, Nuclear Physics B 805, (2008), 190-206, arXiv:0807:3066 [gr-qc].

[10] Kh.Saaidi, A. Mohammadi, T. Golanbari, H. Sheikhahmadi, and B. Ratra, *Quark-hadron phase transition in a chameleon Brans-Dicke model of brane gravity*, Phys. Rev. D 86, (2012), 045007 .

[11] Jorge Morais, *Chiral Dynamics with Explicit Symmetry Breaking Interactions*, Universidade de Coimbra (2014).

HADRONIC JOURNAL 39, 181 - 198 (2016)

RELATIVISTIC KINEMATICS OF TWO-PARAMETRIC RIEMANN SURFACE IN GENUS TWO

A.V. Nazarenko
Bogolyubov Institute for Theoretical Physics
14-b, Metrologichna Str., Kiev 03680, Ukraine
nazarenko@bitp.kiev.ua

Yu.A. Kulinich
Astronomical Observatory, Ivan Franko National
University of Lviv, 8, Kyryla and Methodia Str., Lviv
79005, Ukraine
kul@astro.franko.lviv.ua

Received March 2, 2016

Abstract

It is considered a model of compact Riemann surface in genus two, represented geometrically by two-parametric hyperbolic octagon with an order four automorphism and described algebraically by the corresponding Fuchsian group. Introducing the Fenchel-Nielsen variables, we compute the Weil-Petersson (WP) symplectic two-form of parameter space and analyze the closed isoperimetric orbits for octagons. WP-Area in parameter space and the canonical action–angle variables for the orbits are found. Exploiting the ideas from the loop quantum gravity, we generate relativistic kinematics by the Lorentz boost and quantize WP-area. We treat the evolution in terms of global variables within the "big bounce" concept.

Keywords: Riemann surfaces in genus two, geometrodynamics, area quantization

Copyright © 2016 by Hadronic Press, Inc., Palm Harbor, FL 34684, USA

1 Introduction

The Riemann surfaces are often used in the problems of string theory [1], lower-dimensional gravity [2, 3] and quantum geometry [4]. Sometimes, chaotic behavior in nature can be also related with non-trivial geometry [5, 6].

Here we study free geometrodynamics or kinematics of the surface in genus two associated with hyperbolic octagon which is embedded into Poincaré disk and stable under rotation by $\pi/2$. Identifying the opposite sides of such a domain, it is enough to use two real parameters in order to describe the octagon geometry and the form of Fuchsian group generators. To generate a geometry evolution, we operate by parameter space invariants instead of Riemannian metric which is unknown for us. Note that the involution of similar surfaces and the associated generators were discussed in [7, 8].

Defining the Teichmüller space [9] for a family of the given surfaces, we find the Fenchel-Nielsen variables regarding as global coordinates on it and permitting us to endow the parameter space with the Weil-Petersson (WP) symplectic two-form due to the Wolpert's theorem [10]. Further, we demonstrate that the parameter space can be densely covered by the closed curves of the constant octagon perimeter and describe the diffeomorphism produced by isoperimetric constraint. We consider the set of isoperimetric orbits as a tool for further parametrization and quantization [11].

We determine the canonically conjugate action–angle variables for isoperimetric orbits by identifying the action with WP-area of domain bounded by the orbit in parameter space. This is a main point of our approach using the integral characteristics in a contrast with the formalism based on the local Fenchel–Nielsen parameters of the surface [4]. In this way, we touch the problem of WP-area quantization, which is similar to the one of the loop quantum gravity/cosmology [12].

In order to describe geometrodynamics and to perform area quantization, we extend the algebra of action–angle variables up to generators of $\mathfrak{su}(1,1)$ associated with the Lorentz algebra in (2+1)-dimensional spacetime. Such an approach permits us to formulate the relativistic dynamics of Riemann surface as the canonical transformation generated by the boost.

It is realized in Section 4 and leads to "big bounce" scenario [13, 14] in the parameter space. We note that the quantization of the universe represented by the Riemann surface in genus two was formulated algebraically in [3].

2 Model Octagon and Riemann Surface

The Poincaré model of two-dimensional hyperbolic space is given by open disk $\mathbb{D} = \{z = x + \mathrm{i}y | |z| < 1\}$ and the metric $\mathrm{d}s^2 = 4|\mathrm{d}z|^2/(1-|z|^2)^2$. The geodesic in $(\mathbb{D}, \mathrm{d}s^2)$ is an circle arc inside $\mathbb{D}$ with radius R and center at the point $z_0 = \sqrt{1+R^2}\exp(\mathrm{i}\phi)$ lying beyond the unit disk. In particular case, the geodesics emanating from the origin are the Euclidean straight lines (diameters). All geodesics intersect the boundary $\partial\mathbb{D}$ orthogonally.

The group of all orientation-preserving isometries γ of $(\mathbb{D}, \mathrm{d}s^2)$, denoted by $\mathrm{Isom}^+(\mathbb{D})$, acts via the Möbius transformation:

$$z \mapsto \gamma[z] = \frac{uz+v}{\bar{v}z+\bar{u}}, \quad z \in \mathbb{D}, \tag{1}$$

where u and v satisfy relation $|u|^2 - |v|^2 = 1$; $\bar{u}$, $\bar{v}$ are the complex conjugates. Thus, it is convenient to identify a generator γ with an element of group

$$\mathrm{SU}(1,1) = \left\{ \begin{pmatrix} u & v \\ \bar{v} & \bar{u} \end{pmatrix} \middle| \, |u|^2 - |v|^2 = 1 \right\}. \tag{2}$$

The Riemann surface S is understood here as a compact two-dimensional orientable manifold with the metric of constant negative curvature. Such a surface is obtained from a hyperbolic simply connected octagon $\mathcal{F}$ in $\mathbb{D}$ via gluing opposite sides formed by eight geodesic arcs, whose intersections serve as vertices.

Let the vertices be at the points $a\exp(\mathrm{i}k\pi/2)$, $b\exp[\mathrm{i}(\alpha + k\pi/2)]$ (Fig. 1, left panel), where $0 < \alpha < \pi/2$, $0 < a, b < 1$ and $k = \overline{0,3}$. We also require that the sum of inner angles of $\mathcal{F}$ equals to 2π and hyperbolic $\mathrm{Area}(\mathcal{F}) = 4\pi$ in the case of the surface in genus two.

Choosing two parameters (a, α) as independent real variables, we find that b and the inner angle β by vertices $a\exp(\mathrm{i}k\pi/2)$ are

$$b = \left(\sqrt{2}a\cos\tilde{\alpha}\right)^{-1}, \quad \tan\beta = \frac{1-a^2}{1-b^2}; \quad \tilde{\alpha} = \alpha - \frac{\pi}{4}. \tag{3}$$

Figure 1: Symmetric octagon with $a = 0.8$, $\alpha = \pi/3$ and generators g_k of Fuchsian group.

These allow us to determine the region $\mathcal{A}$ of variety of parameters (a, α):

$$-\pi/4 < \tilde{\alpha} < \pi/4, \quad \left(\sqrt{2}\cos\tilde{\alpha}\right)^{-1} < a < 1, \tag{4}$$

which is shown in Fig. 2 (left panel) below.

To obtain the regular hyperbolic octagon, we should put $b = a = 2^{-1/4}$, $\alpha = \pi/4$.

In the case at a hand, the octagon boundary $\partial\mathcal{F}$ is formed by geodesics of two kinds (labeled by "$\pm$" below), which are completely determined by the radii $R_\pm$ and the angles $\phi_\pm + k\pi/2$, $k = \overline{0,3}$, defining the positions of the circle (arc) centers. Geometrical conditions result in parametrization:

$$R_\pm = \frac{1}{2a}\sqrt{T_\pm^2 + (1-a^2)^2}, \qquad \phi_\pm = \arctan\left[\left(\frac{T_\pm}{1+a^2}\right)^{\pm 1}\right], \tag{5}$$

where $0 < \phi_+ < \alpha < \phi_- < \pi/2$; $T_\pm = a^2 \pm \tan\tilde{\alpha}$; $\tilde{\alpha} = \alpha - \pi/4$.

Here, we connect the model octagon $\mathcal{F}$ with the corresponding Riemann surface S and the Fuchsian group $\Gamma \subset \mathrm{Isom}^+(\mathbb{D})$ isomorphic to fundamental group $\pi_1(S)$.

Since the opposite sides of $\mathcal{F}$ have the same lengths, we can define isometry $g_k \in \mathrm{Isom}^+(\mathbb{D})$ mapping geodesic boundary segment s_{k+4} onto s_k for all

$k = \overline{0,3}$ (see Fig. 1, right panel). Identifying any $z \in s_{k+4}$ with $g_k[z] \in s_k$, we obtain a closed surface. Four isometries g_k and their inverses g_k^{-1} generate Fuchsian group Γ with a single relation:

$$g_0 g_1^{-1} g_2 g_3^{-1} g_0^{-1} g_1 g_2^{-1} g_3 = \mathrm{id}, \tag{6}$$

and we then define surface S as a quotient $\mathbb{D}/\Gamma$.

Our calculations give the dependence of g_0 and g_1 on (a, α):

$$g_0 = N(a,\tilde{\alpha}) \begin{pmatrix} a(1-\tan\tilde{\alpha}) & (a^2-\tan\tilde{\alpha}) + \mathrm{i}(1-a^2) \\ (a^2-\tan\tilde{\alpha}) - \mathrm{i}(1-a^2) & a(1-\tan\tilde{\alpha}) \end{pmatrix}, \tag{7}$$

$$g_1 = N(a,\tilde{\alpha}) \begin{pmatrix} a(1+\tan\tilde{\alpha}) & (1-a^2) + \mathrm{i}(a^2+\tan\tilde{\alpha}) \\ (1-a^2) - \mathrm{i}(a^2+\tan\tilde{\alpha}) & a(1+\tan\tilde{\alpha}) \end{pmatrix}, \tag{8}$$

here

$$N(a,\tilde{\alpha}) = \frac{-\cos\tilde{\alpha}}{\sqrt{(1-a^2)(2a^2\cos^2\tilde{\alpha}-1)}}, \qquad \tilde{\alpha} = \alpha - \frac{\pi}{4}.$$

The remaining generators are simply obtained by rotations:

$$g_{2,3} = R_{\frac{\pi}{2}} g_{0,1} R_{\frac{\pi}{2}}^{-1}, \quad g_k^{-1} = R_\pi g_k R_\pi^{-1}; \tag{9}$$

$$R_\varphi = \begin{pmatrix} \exp(\mathrm{i}\varphi/2) & 0 \\ 0 & \exp(-\mathrm{i}\varphi/2) \end{pmatrix}.$$

Let us mark a surface by generators of Γ. Two marked surfaces (S, Γ) and (S', Γ') are called marking equivalent if there exist an isometry $\gamma : S \to S'$ satisfying $g'_k = \gamma g_k \gamma^{-1}$ $(k = \overline{0,3})$. Then all marking equivalent surfaces form a marking equivalence class $[S, \Gamma]$ representing the Riemann surface S.

The set of all marking equivalence classes of the closed and compact Riemann surfaces in genus g forms the Teichmüller space $\mathcal{T}_g$. The real dimension of $\mathcal{T}_g$ like vector space equals to $6g - 6$ in accordance with the Riemann–Roch theorem. In our case, the Riemann surfaces result in the subset of total $\mathcal{T}_2$.

3 Structure of Parameter Space $\mathcal{A}$

3.1 Symplectic Two-Form

A hyperbolic Riemann surface of genus g without boundary always contains a system of $3g-3$ simple closed geodesics that are neither homotopic to each other nor homotopically trivial. The cut along these geodesics always decomposes surface into $2g-2$ pairs of pants (three-holed spheres), playing a role of natural building blocks for Riemann surface [15].

In the case at hand, surface S is two-holed torus which can be decomposed into two pairs of pants by a system of three closed geodesics. This surgery results in computing the Fenchel–Nielsen (FN) parameters: lengths ℓ_k of these geodesics and the corresponding twists τ_k (see [9, 15]).

For one of possible pants decompositions, we have found these quantities [16]:

$$\ell_{1,2} = 2 \operatorname{arccosh} \frac{a^2}{1-a^2}, \qquad \ell_3 = 2 \ln \frac{1+a}{1-a}, \tag{10}$$

$$\tau_{1,2} = \operatorname{arccosh} \left[\frac{2a^2-1}{a^2(1-b^2)} - 1 \right], \qquad \tau_3 = \ln \frac{1+a}{1-a}. \tag{11}$$

Since the Teichmüller space $\mathcal{T}_2$ is homeomorphic to $\mathbb{R}^6$, one can identify the FN variables with global coordinates on it. Moreover, the Teichmüller space carries additional structure, namely, the Weil–Petersson (WP) symplectic two-form. Due to a theorem of Wolpert [9, 17], WP-form for compact closed Riemann surfaces of genus g takes on a particularly simple form in terms of FN variables,

$$\omega_{\mathrm{WP}} = \frac{1}{2} \sum_{k=1}^{3g-3} \mathrm{d}\ell_k \wedge \mathrm{d}\tau_k, \tag{12}$$

which is invariant with respect to any pants decomposition. Introducing $\theta_k = 2\pi\tau_k/\ell_k$, the simple Dehn twist $\theta_k \to \theta_k + 2\pi$ gives us isometrically the same surface.

Substituting the expressions for ℓ_k and τ_k into (12), WP-form becomes

$$\omega_{\mathrm{WP}} = \frac{8a}{(1-a^2)(2a^2\cos^2\tilde{\alpha}-1)} \mathrm{d}a \wedge \mathrm{d}\tilde{\alpha}, \qquad \tilde{\alpha} = \alpha - \frac{\pi}{4}. \tag{13}$$

To verify the uniqueness of last formula, we can consider another pants decomposition. In terms of our parameters, a new decomposition simply leads to replacement,

$$a \leftrightarrow b, \qquad \tilde{\alpha} \leftrightarrow -\tilde{\alpha}, \tag{14}$$

in length and twist functions of previous decomposition. Although the set of new functions is obtained, the resulting two-form ω_{WP} remains the same.

Thus, domain $\mathcal{A}$ of admissible parameters (a, α) is symplectic manifold $(\mathcal{A}, \omega_{\mathrm{WP}})$. We may also treat two-form (13) as an area element of $\mathcal{A}$.

3.2 Isoperimetric Orbits

Since the area of admissible octagons is always equal to 4π, the simplest way to control the surface changes globally consists in consideration of octagon perimeter:

$$P = 8 \text{ arccosh } \frac{1 - a^2b^2 + \sqrt{(1-a^2)^2 + (1-b^2)^2}}{(1-a^2)(1-b^2)}. \tag{15}$$

Although perimeter P is obviously invariant under automorphism and pants decomposition, it can also take on the same value for different pairs (a, α). We are aiming to describe the corresponding orbits. On the contrary to our case, two parameters of *flat* octagon with the same automorphism and the homothety property are exactly defined by fixing its area and perimeter.

For further calculations, it is useful to introduce two auxiliary quantities:

$$T \equiv \tanh(P/16), \qquad \varepsilon = \pm 1, \tag{16}$$

where the latter one reflects an existence of two sheets in $\mathcal{A}$ labeled by sign $\tilde{\alpha}$.

For a given $T(P)$, maximal and minimal values of a at $\tilde{\alpha} = 0$ are

$$a_{\pm}(T) = \frac{1}{2}\sqrt{2 + T^2 \pm \sqrt{(2+T^2)^2 - 8}}. \tag{17}$$

Solution to equation $(2+T^2)^2 = 8$ is $T_{\mathrm{reg}} = \sqrt{2\sqrt{2} - 2}$ that results in quantities $P_{\mathrm{reg}} = 8 \text{ arccosh } (5 + 4\sqrt{2})$ and $a_{\mathrm{reg}} = 2^{-1/4}$ corresponding to

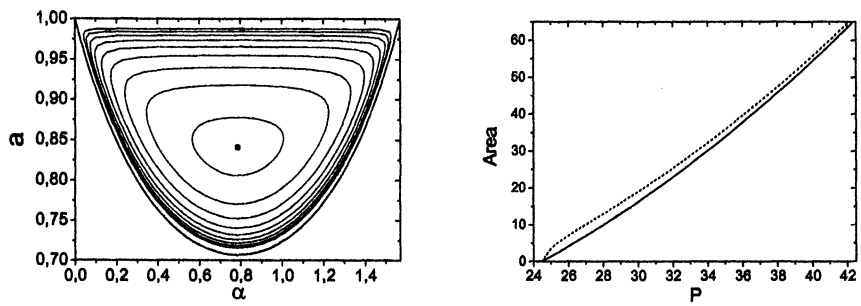

Figure 2: Left panel: Parameter space $\mathcal{A}$ and orbits of constant perimeter. Right panel: WP-Area of domain bounded by isoperimetric curve. Solid curve is computed numerically; dashed curve is given by analytic approximation (43).

the regular octagon. Thus, $P_{\rm reg} \approx 24.457$ is a minimal value of P among possible ones and trajectory in $\mathcal{A}$ for $P_{\rm reg}$ is contracted to a point.

Isoperimetric orbits can then be parametrized as

$$a(T,\varphi) = \frac{1}{2}\sqrt{2+T^2+\cos\varphi\sqrt{(2+T^2)^2-8}}, \tag{18}$$

$$\tilde{\alpha}(T,\varphi) = \arctan\frac{\sqrt{2}\sqrt{(2+T^2)^2-8}\sin\varphi}{2\sqrt{3T^2-2-\cos\varphi\sqrt{(2+T^2)^2-8}}}, \tag{19}$$

where cyclic variable $\varphi \in [0, 2\pi)$ is used.

These orbits are shown in Fig. 2 (left panel) for P from $P = 25$ to $P = 41$ with step 2. Although the role of octagon perimeter is unclear from the physical point of view, it is important that the isoperimetric constraint guarantees the dense covering of $\mathcal{A}$, which has an unique shape, by the corresponding orbits. This fact allows us to quantize $(\mathcal{A}, \omega_{\rm WP})$ in a spirit of [11]. To realize it, we should identify the Weil-Petersson area $A_{\rm WP}(P)$ of domain in $\mathcal{A}$, bounded by curve for fixed P, with an action variable, that is, integral of motion. Then, quantization has to give us the number of quantum "cells" inside of the domain. It seems enough if additional physics (except quantization) is not used. However, we shall require SO(2,1) symmetry of dynamics in accordance with Lorentzian (2+1)-dimensional

gravity.

Using the symplectic form (13), let us define WP-area:

$$\begin{aligned} A_{\mathrm{WP}}(P) &\equiv \int_{P=\mathrm{const}} \omega_{\mathrm{WP}} \\ &= \int_{x_-(T)}^{x_+(T)} \frac{8\mathrm{d}x}{(1-x)\sqrt{2x-1}} \operatorname{arccosh} f(x,T), \end{aligned} \tag{20}$$

where $x \equiv a^2$; functions $x_\pm(T) \equiv a_\pm^2(T)$ are determined by (17);

$$f(x,T) = \frac{1}{\sqrt{1-T^2}} \sqrt{\frac{2x-1}{x}} \sqrt{\frac{T^2-x}{T^2-2x+1}}, \tag{21}$$

and convention (16) is applied.

Analytic estimation of WP-area is made in Appendix A. We show in Fig. 2 (right panel) that $A_{\mathrm{WP}}^{(0)}(P)$ tends to numerically computed $A_{\mathrm{WP}}(P)$ at large P, but behavior at $P \to P_{\mathrm{reg}}$ looks incorrect. However, we shall see that the derivative $\mathrm{d}A_{\mathrm{WP}}(P)/\mathrm{d}P$ can be calculated explicitly.

3.3 Global Canonical Variables

Finding the canonical variables for isoperimetric orbits, let us define

$$Q(x,T) = \frac{\sqrt{2}}{4} \frac{1-T^2}{\sqrt{T^2-x_-}} \left[\frac{F(u,k)}{1-T^2} - \frac{\Pi(u,\nu_1,k)}{1-x_-} + \frac{\Pi(u,\nu_2,k)}{T^2-2x_-+1} \right], \tag{22}$$

where F and Π are elliptic integrals of the first and third kind, respectively.

Amplitude u, module k, and parameters ν_1 and ν_2 are given by

$$\begin{aligned} u &= \sqrt{\frac{x-x_-}{x_+-x_-}}, & k &= \sqrt{\frac{x_+-x_-}{T^2-x_-}}, \\ \nu_1 &= \frac{x_+-x_-}{1-x_-}, & \nu_2 &= 2\frac{x_+-x_-}{T^2-2x_-+1}. \end{aligned} \tag{23}$$

Then, symplectic WP-form becomes

$$\omega_{\mathrm{WP}} = \varepsilon \mathrm{d}Q(x,T) \wedge \mathrm{d}P. \tag{24}$$

Integrating over x, we see that

$$\begin{aligned}\frac{\mathrm{d}A_{\mathrm{WP}}}{\mathrm{d}P} &\equiv \oint_{P=\mathrm{const}} \varepsilon \mathrm{d}Q(x,T) = \int_{x_-}^{x_+} \mathrm{d}Q(x,T) - \int_{x_+}^{x_-} \mathrm{d}Q(x,T) \\ &= 2Q(x_+,T), \end{aligned} \tag{25}$$

where amplitude $u = 1$ results in the complete elliptic integrals.

Defining the action variable (or "angular momentum") as

$$J(P) = \frac{1}{4\pi} A_{\mathrm{WP}}(P), \tag{26}$$

we find the angle variable Φ from equation $\omega_{\mathrm{WP}} = 2\mathrm{d}\Phi \wedge \mathrm{d}J$; the Poisson bracket is then $\{J, \Phi\}_{\mathrm{WP}} = 1$. One first has that

$$\mathrm{d}\Phi = \frac{\pi\varepsilon}{Q(x_+,T)} \mathrm{d}Q(x,T), \qquad \oint_{P=\mathrm{const}} \mathrm{d}\Phi = 2\pi, \tag{27}$$

where the rule of calculation of integrals containing ε (see (25)) is applied.

At fixed P, we come to expression for the angle variable:

$$\Phi = \pi\varepsilon \frac{Q(x,T)}{Q(x_+,T)}, \quad \Phi \in [-\pi, \pi]. \tag{28}$$

Now it seems trivially to quantize the system in terms of J and Φ what leads immediately to estimation (in the Planck units) for relatively large n:

$$A_{\mathrm{WP}} \sim 4\pi n, \qquad n \in \mathbb{N}. \tag{29}$$

We specify this formula below due to consideration of the relativity theory.

4 Relativistic Kinematics

At this stage, geometrodynamics of Riemann surface within the considered model is ambiguous because of purely gauge nature. There are only the geometric constraints defining the "physical sector" of parameters variety and no definitions of time and the Hamiltonian function having the physical meaning and generating an evolution of J and Φ. However, we appeal here

to (2+1)-dimensional gravity where $\mathrm{SO}(2,1) \sim \mathrm{SU}(1,1)$ plays the role of the Lorentz group. It allows us to construct a dynamical model with the same symmetry as follows.

Combining the basic variables J and Φ, we expand the set of observables up to

$$J_0 = J, \quad J_\pm = \sqrt{J^2 - C}\exp(\mp \mathrm{i}\Phi), \tag{30}$$

where C is a constant such that $J^2 \geqslant C \geqslant 0$.

The Poisson algebra of new variables is $\mathfrak{su}(1,1)$ Lie algebra:

$$\{J_+, J_-\}_{\mathrm{WP}} = 2\mathrm{i}J_0, \qquad \{J_\pm, J_0\}_{\mathrm{WP}} = \pm\mathrm{i}J_\pm. \tag{31}$$

More generally, generators $J_{0,\pm}$ may be replaced by an infinite number of quantities $L_n = J\exp(\mathrm{i}n\Phi)$, $n \in \mathbb{Z}$, generating the Witt algebra.

Since the evolution of conservative system is usually described by canonical transformations, we find that indeed SU(1,1) transformations are canonical transformations of a given system. Let us introduce the matrix

$$\mathcal{M} = \begin{pmatrix} J_0 & J_+ \\ J_- & J_0 \end{pmatrix}, \tag{32}$$

whose determinant $C \equiv J_0^2 - J_+J_-$ is the Casimir of $\mathfrak{su}(1,1)$ algebra.

Action of matrix $U \in \mathrm{SU}(1,1)$ looks like $\mathcal{M} \mapsto \tilde{\mathcal{M}} = U\mathcal{M}U^\dagger$ and preserves the Casimir, $\det\tilde{\mathcal{M}} = C$.

Relativistic kinematics of the surface can be generated by the boost:

$$U_\tau = \begin{pmatrix} \cosh(\tau/2) & \sinh(\tau/2) \\ \sinh(\tau/2) & \cosh(\tau/2) \end{pmatrix}. \tag{33}$$

Computing $\mathcal{M}(\tau) = U_\tau\mathcal{M}(0)U_\tau^\dagger$, one derives the trajectories for $J_{0,\pm}$ or, equivalently, for J and Φ:

$$J(\tau) = \breve{J}\cosh\tau + \sqrt{\breve{J}^2 - C}\sinh\tau\cos\breve{\Phi}, \tag{34}$$

$$\Phi(\tau) = \arccos\frac{\breve{J}\sinh\tau + \sqrt{\breve{J}^2 - C}\cosh\tau\cos\breve{\Phi}}{\sqrt{J^2(\tau) - C}}, \tag{35}$$

where $\breve{J} = J[P(a_0,\alpha_0)]$, $\breve{\Phi} = \Phi[a_0, P(a_0,\alpha_0)]$ are the values of functions (26), (28) at the moment $\tau = 0$.

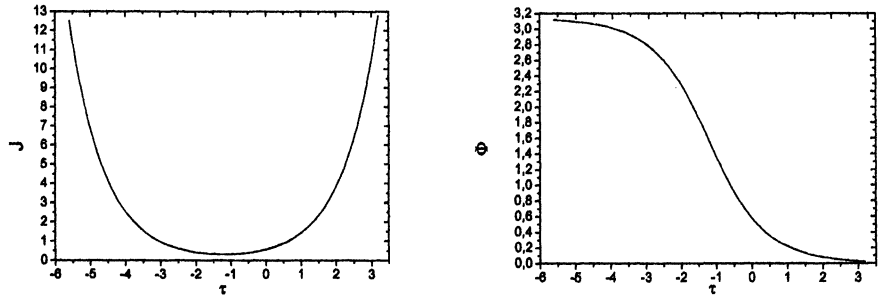

Figure 3: Plots of the "angular momentum" (on the left) and its conjugate angle Φ (on the right) as functions of the internal time τ; $C = 0$ and initial data are $a_0 = 0.8$, $\alpha_0 = \pi/3$. The surface starts with an infinite WP area at $\tau \to -\infty$, contracts and bounces to expand again to infinite area at $\tau \to \infty$.

On the other hand, the evolution can be described by the Hamiltonian equations:

$$\partial_\tau J \equiv \{J, H\}_{\mathrm{WP}} = \sqrt{J^2 - C}\cos\Phi, \tag{36}$$

$$\partial_\tau \Phi \equiv \{\Phi, H\}_{\mathrm{WP}} = -\frac{J}{\sqrt{J^2 - C}}\sin\Phi, \tag{37}$$

where the Hamiltonian

$$H(J, \Phi, C) = \sqrt{J^2 - C}\sin\Phi \tag{38}$$

belongs to $\mathfrak{so}(2,1)$ algebra.

Of course, the form of Hamiltonian depends generally on the physical problem under consideration. In relativistic cosmology, different scenarios lead to modifications of (38) which are discussed, for instance, in [14].

In our case, time dependence of functions $J(\tau)$, $\Phi(\tau)$ is sketched in Fig. 3. The graphs demonstrate the "bounce" in the parameter space. Finding the zeroes of the derivatives of (34), (35) with respect to τ, the bounce characteristics are

$$\tau_{\mathrm{b}} = -\mathrm{arctanh}\left(\frac{\sqrt{\breve{J}^2 - C}}{\breve{J}}\cos\breve{\Phi}\right), \quad J_{\mathrm{b}} = \sqrt{\breve{J}^2\sin^2\breve{\Phi} + C\cos^2\breve{\Phi}}, \quad \Phi_{\mathrm{b}} = \varepsilon\frac{\pi}{2}. \tag{39}$$

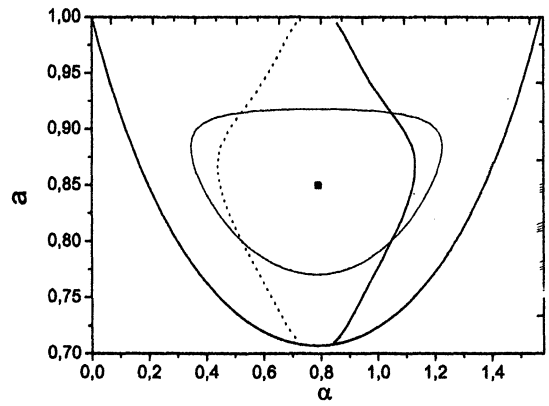

Figure 4: The trajectory of the Riemann surface evolution for $a_0 = 0.8$, $\alpha_0 = \pi/3$ and $C = 0$. Bold line corresponds to $\varepsilon = 1$, the dashed line is for $\varepsilon = -1$. The closed curve is the isoperimetric orbit determined by initial data.

In principal, we are interested here in the form of trajectory in parameter space $\mathcal{A}$ without specification of evolution parameter or time. It can be found by means of constraint

$$H\{J[P(a,\alpha)], \Phi[a, P(a,\alpha)], C\} = E, \qquad (a,\alpha) \in \mathcal{A}, \tag{40}$$

where constant E is the value of Hamiltonian function H for the initial data (a_0, α_0).

Although Eq. (40) says at the first sight that the points of trajectory is simply determined from an abstract equation $h(a, \alpha, C, E) = 0$ with additional constants C and E, we would like to emphasize its structure reflecting the chain of our buildings.

In terms of a and α the trajectory looks like in Fig. 4, where influence of C is neglected because of quantum nature assumed. It is interesting to note that the system geometry does not tend to the regular octagon having a maximal information entropy. At the values $a_{\min} = 1/\sqrt{2}$ and $a_{\max} = 1$ corresponding to the infinite past and the infinite future time, angle α of hyperbolic octagon reaches the same value $\pi/4$. Thus, geometry

with $\alpha = \pi/4$ is exceptional in our model. We would like also to note that there are two configurations for $\varepsilon = \pm 1$ (left and right with respect to $\tilde{\alpha} = 0$), which are not mixed during whole evolution generated by the pure boost. The chosen preference is preserved from the origin to the end. However, we have already seen that there is the diffeomorphism generated by conservation condition of hyperbolic octagon perimeter, which allows us the transition between "phases" with $\varepsilon = \pm 1$. Combining it with an action of the boost, it is possible to construct a novel scenario of classical geometrodynamics, even in the case when the Riemannian metric of the parameter (or moduli) space is undetermined.

Coming back to quantization problem, the generator J_0 and its spectrum describes WP-area. For this reason its eigenvalues should be discrete and positive. We choose the irreducible representation (46) with the standard basis diagonalizing the Casimir and J_0 and with the minimal positive spin $j = 1/2$. It leads straightforwardly to the spectrum (in the Planck units):

$$A_{\mathrm{WP}} = 4\pi \left(n + \frac{1}{2} \right), \qquad n \in \mathbb{N}. \tag{41}$$

In classical picture, $A_{\mathrm{WP}} = 0$ for P_{reg}, while A_{WP} is always non-vanishing at quantum level for the system with a given topology. It means that the regular octagonal configuration is not achieved because of quantum effect.

Although the basis of $\mathfrak{su}(1,1)$ is enough to quantize A_{WP} as a global characteristic of $\mathcal{A}$, it looks insufficient to apply for finding the spectra of other geometric observables. Further investigations are still needed.

5 Conclusions

Here, we pay great attention to the structure of admissible parameters space $\mathcal{A}$ determining the geometry of the Riemann surface in genus two with an order four automorphism. First, using the Weil-Petersson (WP) geometry, two-dimensional space $\mathcal{A}$ is equipped with the fundamental symplectic two-form. Further, we produce the dense covering of $\mathcal{A}$ by the orbits generated by the isoperimetric constraint which is imposed on fundamental domain of the surface. It is argued that an existence of these orbits is due to the

Riemann surface definition. The canonically conjugate action–angle variables for isoperimetric orbits are found by identifying WP-area of domain bounded by the orbit with the action variable. As the result, we take on a possibility to construct a relativistic model in terms of special invariants without knowing the Riemannian metric of $\mathcal{A}$.

To build the physically meaningful model, we extend the set of global canonical variables up to generators of $\mathfrak{su}(1,1)$ algebra. This trick leads to appearance of the Casimir playing the role of additional parameter. We can only assume that its value should be minimal and non-zero. However, it leads after quantization to non-vanishing discrete spectrum of WP-area in a contrast with initial theory where WP-area becomes zero for the Riemann surface associated with the regular hyperbolic octagon. In any case, we should remember that WP-area determines the surface geometry up to diffeomorphism in the classical theory. We may need to use the infinite Witt and Virasoro algebras instead of $\mathfrak{su}(1,1)$ in order to describe the system spectrum.

We also consider a relativistic kinematics or free geometrodynamics of the Riemann surface generated by the Lorentz boost which acts on the constructed generators of $\mathfrak{su}(1,1)$ algebra. The time dependence of global variables leads to "big bounce" scenario and is similar for quantities of different origin. However, solving equations with respect to the surface parameters, we have obtained the trajectory (independent on time definition) in space $\mathcal{A}$. In this picture, the system does not tend to reach the regular octagon configuration corresponding the maximal information entropy [6] and preserves some kind of $\mathbb{Z}_2$ symmetry related to the range of admissibility of the angle variable during whole evolution.

Acknowledgments

A.N. is deeply indebted to A.M. Gavrilik (BITP, Kiev) and I.V. Mykytiuk (IAPMM, Lviv) for fruitful discussions of mathematical aspects of the problem. This work is partially supported by Department of Physics and Astronomy of NAS of Ukraine.

A Weil–Petersson Area Estimation

To evaluate the integral (20) analytically, we use the asymptotic expansion:

$$\operatorname{arccosh} z = \ln(2z) - \frac{1}{2\cdot 2z^2} - \frac{1\cdot 3}{2\cdot 4\cdot 4z^4} - \frac{1\cdot 3\cdot 5}{2\cdot 4\cdot 6\cdot 6z^4} - \dots . \tag{42}$$

Limiting ourselves by accounting for logarithmic term only, we obtain

$$A^{(0)}_{\mathrm{WP}}(P) = F(T, \sqrt{2x_+(T)-1}) - F(T, \sqrt{2x_-(T)-1}), \tag{43}$$

where

$$\begin{aligned} F(T,\xi) \;=\; & 16\ln\frac{2}{\sqrt{1-T^2}}\operatorname{arctanh}\xi + 8\ln\xi\ln(1+\xi) + 8\operatorname{dilog}\xi \\ & +8\operatorname{dilog}(1+\xi) + 4\sum_{\epsilon=\pm 1}\Bigg\{\operatorname{dilog}\frac{T+\epsilon\xi}{T-\epsilon} - \operatorname{dilog}\frac{T+\epsilon\xi}{T+\epsilon} \\ & +\operatorname{dilog}\left[\frac{1-\xi}{2} + \epsilon\mathrm{i}\frac{1+\xi}{2}\right] - \operatorname{dilog}\left[\frac{1+\xi}{2} + \epsilon\mathrm{i}\frac{1-\xi}{2}\right] \\ & +\operatorname{dilog}\frac{\sqrt{2T^2-1}+\epsilon\xi}{\sqrt{2T^2-1}+\epsilon} - \operatorname{dilog}\frac{\sqrt{2T^2-1}+\epsilon\xi}{\sqrt{2T^2-1}-\epsilon}\Bigg\}. \end{aligned} \tag{44}$$

Here, the dilogarithm function is defined by the following series:

$$\operatorname{dilog} z = \sum_{p=1}^{\infty}\frac{(1-z)^p}{p^2}. \tag{45}$$

B Basis of SU(1,1)

We use the usual basis of SU(1,1) diagonalizing both the Casimir and the operator J_0. The action of $\mathfrak{su}(1,1)$ generators on this orthonormal basis is

$$\begin{aligned} C|j,m\rangle &= j(j-1)|j,m\rangle, \qquad J_0|j,m\rangle = m|j,m\rangle, \\ J_+|j,m\rangle &= \sqrt{(m-j+1)(m+j)}|j,m+1\rangle, \\ J_-|j,m\rangle &= \sqrt{(m-j)(m+j-1)}|j,m-1\rangle. \end{aligned} \tag{46}$$

There are two types of (discrete) representations: the positive series with $1/2 \le j \le m = j + \mathbb{N}$; and the negative one with $-1/2 \ge j \ge m = j - \mathbb{N}$. Here we restrict our consideration by the irreducible representation of positive spin j.

References

[1] E. D'Hocker and D.H. Phong, The geometry of string perturbation theory, Rev. Mod. Phys. **60** (1988), 917–1065.

[2] R. Loll, Independent loop invarints for 2+1 gravity, Class. Quant. Grav. **12** (1995), 1655–1662; gr-qc/9408007.

[3] J.E. Nelson and T. Regge, 2+1 Gravity for genus > 1, Commun. Math. Phys. **141** (1991), 211–223.

[4] R.M. Kashaev, On the spectrum of Dehn twists in quantum Teichmüller theory, math/0008148, (2000).

[5] M.C. Gutzwiller, *Chaos in Classical and Quantum Mechanic*, Springer-Verlag, New York, 1990.

[6] A.V. Nazarenko, Directed random walk on the lattices of genus two, Int. J. Mod. Phys. **B25** (2011), 3415–3433.

[7] R. Silhol, On some one parameter families of genus 2 algebraic curves and half twists, Comment. Math. Helv. **82** (2007), 413–449.

[8] P. Buser and R. Silhol, Some remarks on the uniformizing function in genus 2, Geometriae Dedicata **115** (2005), 121–133.

[9] Y. Imayoshi and M. Taniguchi, *An Introduction to Teichmüller Space*, Springer-Verlag, Tokyo, 1992.

[10] S.A. Wolpert, On the Weil-Petersson geometry of the moduli space of curves, Amer. J. Math. **107** (1985), 969–997.

[11] N.E. Hurt, *Geometric Quantization in Action: Applications of Harmonic Analysis in Quantum Statistical Mechanics and Quantum Field Theory*, D. Reidel Publishing Company, 1983.

[12] C. Rovelli and L. Smolin, Discreteness of area and volume in quantum gravity, Nucl. Phys. **B442** (1995), 593–619.

[13] A. Ashtekar, T. Pawlowski and P. Singh, Quantum nature of the Big Bang, Phys. Rev. Lett. **96** (2006), 141301.

[14] E.R. Livine and M. Martin-Benito, Group theoretical quantization of isotropic loop cosmology, Phys. Rev. **D85** (2012), 124052.

[15] P. Buser, *Geometry and Spectra of Compact Riemann Surfaces*, Birkhäuser, 1992.

[16] A.V. Nazarenko, Two-parametric hyperbolic octagons and reduced Teichmueller space in genus two, math-ph/13015446 (2013).

[17] S.A. Wolpert, The Weil-Petersson metric geometry, math.DG/0801.0175v1 (2008).

HADRONIC JOURNAL 39, 199 - 225 (2016)

ON CORDA'S 'CLARIFICATION' OF SCHWARZSCHILD'S SOLUTION

Stephen J. Crothers
P.O. Box 1546, Sunshine Plaza 4556
QLD Australia
steve@plasmaresources.com

Institute for Basic Research
35246 US 19 North #215
Palm Harbor, FL 34684 USA

Received May 23, 2016

Abstract

A paper by C. Corda (*A Clarification on the Debate on "the Original Schwarzschild Solution"*, *EJTP* 8, **No. 25** (2011) 65-82) purports equivalence of Schwarzschild's original solution (1916) and Hilbert's subsequent solution (1917), the latter commonly but incorrectly called 'Schwarzschild's solution'. The derivation of Schwarzschild's actual solution by Corda is, in fact, a copy of Schwarzschild's original derivation with only changes in notation and equation numbering. It adds nothing new to the problem. Corda's subsequent arguments on gravitational collapse follow those advanced by Misner, Thorne, and Wheeler for Hilbert's solution, in their book 'Gravitation', and suffer thereby from the very same shortfalls. Consequently, Corda has failed to prove his alleged equivalence of the Schwarzschild and Hilbert solutions. Moreover, it is not difficult to prove that these are not equivalent. Furthermore, all methods employed to otherwise 'extend' Droste's solution into Hilbert's solution thus producing a black hole constitute a violation of the rules of pure mathematics and are invalid.

Keywords: Schwarzschild solution; Black holes; Metric extensions; General Relativity.

Copyright © 2016 by Hadronic Press, Inc., Palm Harbor, FL 34684, USA

1 Introduction

One hundred years ago, on the 13th of January 1916, Karl Schwarzschild communicated his solution to Einstein's gravitational field for a 'mass point'. Then, less than five years ago, on the 25th of May 2011, a paper by Christian Corda was published which reproduced most of Schwarzschild's paper. In a prelude on page 70 of his paper, Corda stated,

> *"In our approach we will suppose again that $a(r,t) = 0$, but, differently from the standard analysis, we will assume that the length of the circumference centred in the origin of the coordinate system is not $2\pi r$. We release an apparent different physical assumption, i.e. that arches of circumference are deformed by the presence of mass of the central body M. Note that this different physical hypothesis permits to circumnavigate the Birkhoff Theorem [4] which leads to the 'standard Schwarzschild solution' [3]."*

Then, before launching into his modifications of Schwarzschild's equations, Corda stated, again on page 70,

> *"Then, we proceed assuming $-mr^2$, where m is a generic function to be determined in order to obtain the length of circumferences centred in the origin of the coordinate system are not $2\pi r$. In other words, m represents a measure of the deviation from $2\pi r$ of circumferences centred in the origin of the coordinate system."*

Corda's special generic function $m=m(r)$ plays no special role since it already appeared in Schwarzschild's paper as $G=G(r)$, where it deformed nothing.

Schwarzschild's solution [1] for Einstein's equations $R_{\mu\nu} = 0$ is,

$$ds^2 = \left(1-\frac{\alpha}{R}\right)dt^2 - \left(1-\frac{\alpha}{R}\right)^{-1} dR^2 - R^2\left(d\theta^2 + \sin^2\theta\, d\varphi^2\right) \tag{1.1}$$
$$R = \left(r^3+\alpha^3\right)^{1/3}, \quad 0 \le r$$

Hilbert's solution [2] is,

$$ds^2 = \left(1-\frac{2m}{r}\right)dt^2 - \left(1-\frac{2m}{r}\right)^{-1} dr^2 - r^2\left(d\theta^2 + \sin^2\theta\, d\varphi^2\right) \tag{1.2}$$
$$0 \le r$$

Corda [3] has argued that Schwarzschild's original solution (1916) is equivalent to Hilbert's solution (1917)[1]. It is evident that Schwarzschild's solution is singular (i.e. undefined) only at $r = 0$. Prima facie, Hilbert's solution seems to be singular at $r = 2m$ and at $r = 0$, by which the black hole originated. In Eq.(1.1), $r = \sqrt{x^2+y^2+z^2}$, where x, y, z are Cartesian coordinates for Euclidean 3-space, and so r is the radius of a Euclidean sphere centred at the origin of coordinates. Nonetheless neither R nor r is the radius of anything or even a distance in Eq.(1.1)[2] and similarly r in Eq.(1.2) is neither radius nor distance therein. Now let r' be the radius of a Euclidean sphere. It is routinely claimed that in Eq.(1.2), $r = r' = \sqrt{x^2+y^2+z^2}$ (e.g. Einstein [4]), from which the black hole was constructed. This is incorrect because in (1.2), $r = \sqrt{x_0^2+y_0^2+z_0^2}$ + $\sqrt{(x-x_0)^2+(y-y_0)^2+(z-z_0)^2}$ = $r + r'$ where $r_0 = \sqrt{x_0^2+y_0^2+z_0^2}$ = $2m$ is the distance of the centre of a Euclidean sphere from the origin of coordinates and r' its radius, which has been explained elsewhere [5-7]. Only when $x_0 = y_0 = z_0 = 0 = r_0$ does $r = r' = \sqrt{x^2+y^2+z^2}$. When a sphere

[1] In Eq.(1.1) c=1, in Eq.(1.2) c=1 and Newton's gravitational constant G=1.

[2] Although Eq.(1.1) and Eq.(1.2) are spherically symmetric they non-Euclidean. Hence the radius in Eq.(1.1) and Eq.(1.2) is not r. The radius must be calculated from the non-Euclidean equations, so that the Euclidean radial distance corresponds to the different non-Euclidean radial distance. There are two different but related spaces involved; Euclidean space and non-Euclidean space.

initially centred at the origin of coordinates is moved, it takes its centre with it, and the position of the Euclidean sphere is specified by the coordinates of its centre (x_0,y_0,z_0) so that $r_0 = \sqrt{x_0^2 + y_0^2 + z_0^2}$ whereupon the radius r' of the sphere is no longer given by $r = r' = \sqrt{x^2 + y^2 + z^2}$, but by $r' = \sqrt{(x - x_0)^2 + (y - y_0)^2 + (z - z_0)^2}$. The intrinsic geometry of a sphere is not altered by changing its position and so its radius does not change with a change of position. When Hilbert set r^2 as the coefficient of $(d\theta^2 + \sin^2\theta\, d\varphi^2)$ in the derivation of his solution, he unwittingly shifted the centre of Schwarzschild's Euclidean sphere from r=r_0=0 to the coordinates (x_0,y_0,z_0) at the distance $r_0 = \sqrt{x_0^2 + y_0^2 + z_0^2}$ =2m from the origin of coordinates, mistakenly thinking the centre still at r=0. Hilbert shifted Schwarzschild's Euclidean sphere but left its centre behind. The result was fantastic. David Hilbert had separated the Euclidean sphere from its centre and even placed the centre outside the sphere. Consequently, Hilbert's solution is not equivalent to Schwarzschild's, and black hole theory violates the rules of pure mathematics. Accordingly, Corda has incorrectly argued that in (1.1), $-\alpha \leq r$, in order to produce two singularities in the fashion of Hilbert's solution leading to the black hole: Corda incorrectly argues that $-\alpha \leq \sqrt{x^2 + y^2 + z^2}$ in (1.1).

2 Notation manipulations

Schwarzschild used the following notation in his paper: F, G, H, x_1, x_2, x_3, x_4, f_1, f_2, f_3, where F, G, H, f_1, x_1, f_2, f_3 are functions of $r = \sqrt{x^2 + y^2 + z^2}$, and $x_1 = r^3/3$, $x_2 = -\cos\theta$, $x_3 = \varphi$, x_4=t.

Corda used the following notation in his paper: l, m, h, X, Y, Z, t, A, B, C, where l, m, h, X, A, B, C are functions of $r = \sqrt{x^2 + y^2 + z^2}$.

That Corda's derivation of Schwarzschild's solution is merely a point by point copy of Schwarzschild's is demonstrated by comparisons:

Schwarzschild

$$ds^2 = Fdt^2 - \left(G + Hr^2\right)dr^2 - Gr^2\left(d\theta^2 + \sin^2\theta\, d\varphi^2\right) \tag{6}$$

$$x_1 = \frac{r^3}{3}, \quad x_2 = -\cos\theta, \quad x_3 = \varphi \tag{7}$$

$$ds^2 = Fdx_4^2 - \left(\frac{G}{r^4} + \frac{H}{r^2}\right)dx_1^2 - Gr^2\left[\frac{dx_2^2}{1-x_2^2} + dx_3^2\left(1-x_2^2\right)\right] \tag{8}$$

Corda

$$ds^2 = hdr^2 - mr^2\left(d\theta^2 + \sin^2\theta\, d\varphi^2\right) + ldt^2 \tag{5}$$

$$X = \frac{r^3}{3}, \quad Y = -\cos\theta, \quad Z = \varphi \tag{6}$$

$$ds^2 = ldt^2 + \frac{h}{r^4}dX^2 - mr^2\left[\frac{dY^2}{1-Y^2} + dZ^2\left(1-Y^2\right)\right] \tag{7}$$

Inspection reveals that Corda's equations (5), (6) and (7) are precisely Schwarzschild's equations (6), (7) and (8) respectively, with the following change of notation: $l=F$, $h=-(G+Hr^2)$, $m=G$, $X=x_1$, $Y=x_2$, $Z=x_3$, $t=x_4$. In his Eq.(5) Corda has also rearranged the order of the components of Schwarzschild's Eq.(6).

At his Eqs.(8) Corda sets $A \equiv -h/r^4$, $B \equiv mr^2$, $C \equiv l$, and rewrites his Eq.(7) as,

$$ds^2 = Cdt^2 - AdX^2 - B\frac{dY^2}{1-Y^2} - BdZ^2\left(1-Y^2\right) \tag{10}$$

Compare this to Schwarzschild's Eq.(9),

$$ds^2 = f_4 dx_4^2 - f_1 dx_1^2 - f_2\frac{dx_2^2}{1-x_2^2} - f_2 dx_3^2\left(1-x_2^2\right) \tag{9}$$

Corda's Eq.(10) is just Schwarzschild's Eq.(9) relabelled with $C=f_4$, $t=x_4$, $A=f_1$, $X=x_1$, $B=f_2=f_3$ (since $f_2=f_3$ in Schwarzschild's analysis), $Y=x_2$ and $Z=x_3$.

Corda then goes on to the Riemann-Christoffel symbols of the second kind at his Eqs.(11). They are the same as Schwarzschild's, except for Corda's relabelling, and the fact that Schwarzschild [1] did not number them. Since there are ten such pairs of symbols, only a few are listed by way of example:

Schwarzschild

$$\Gamma^1_{11} = -\frac{1}{2}\frac{1}{f_1}\frac{\partial f_1}{\partial x_1}, \quad \Gamma^1_{22} = +\frac{1}{2}\frac{1}{f_1}\frac{\partial f_2}{\partial x_1}\frac{1}{1-x_2^2}, \quad \Gamma^3_{31} = -\frac{1}{2}\frac{1}{f_2}\frac{\partial f_2}{\partial x_1} \quad \cdots$$

Corda

$$\Gamma^X_{XX} = -\frac{1}{2A}\frac{\partial A}{\partial X}, \quad \Gamma^X_{YY} = \frac{1}{2A}\frac{\partial B}{\partial X}\frac{1}{1-Y^2}, \quad \Gamma^Z_{ZX} = -\frac{1}{2B}\frac{\partial B}{\partial X} \quad \cdots \quad (11)$$

wherein Corda set $A=f_1$, $X=x_1$, $B=f_2$, $Y=x_2$, $Z=x_3$. He also rearranged the order of the ten Riemann-Christoffel symbols appearing in Schwarzschild's paper.

Equations (13), (14), (15), and (16) in Corda's paper are precisely Schwarzschild's equations (b), (a), (c) and (d) respectively, rearranged to equate to zero, and embellished with Corda's relabelling:

Schwarzschild

$$\frac{\partial}{\partial x_1}\left(\frac{1}{f_1}\frac{\partial f_1}{\partial x_1}\right) = \frac{1}{2}\left(\frac{1}{f_1}\frac{\partial f_1}{\partial x_1}\right)^2 + \left(\frac{1}{f_2}\frac{\partial f_2}{\partial x_1}\right)^2 + \frac{1}{2}\left(\frac{1}{f_4}\frac{\partial f_4}{\partial x_1}\right)^2 \qquad \text{(a)}$$

Corda

$$\frac{\partial}{\partial X}\left(\frac{1}{A}\frac{\partial A}{\partial X}\right) - \frac{1}{2}\left(\frac{1}{A}\frac{\partial A}{\partial X}\right)^2 - \left(\frac{1}{B}\frac{\partial B}{\partial X}\right)^2 - \frac{1}{2}\left(\frac{1}{C}\frac{\partial C}{\partial X}\right)^2 = 0 \qquad (14)$$

Schwarzschild

$$\frac{\partial}{\partial x_1}\left(\frac{1}{f_1}\frac{\partial f_2}{\partial x_1}\right) = 2 + \frac{1}{f_1 f_2}\left(\frac{\partial f_2}{\partial x_1}\right)^2 \qquad \text{(b)}$$

Corda

$$\frac{\partial}{\partial X}\left(\frac{1}{A}\frac{\partial B}{\partial X}\right) - 2 - \frac{1}{AB}\left(\frac{\partial B}{\partial X}\right)^2 = 0 \qquad (13)$$

Schwarzschild

$$\frac{\partial}{\partial x_1}\left(\frac{1}{f_1}\frac{\partial f_4}{\partial x_1}\right)=\frac{1}{f_1 f_4}\left(\frac{\partial f_4}{\partial x_1}\right)^2 \qquad \text{(c)}$$

Corda

$$\frac{\partial}{\partial X}\left(\frac{1}{A}\frac{\partial C}{\partial X}\right)-\frac{1}{AC}\left(\frac{\partial C}{\partial X}\right)^2=0 \qquad (15)$$

Schwarzschild

$$\frac{1}{f_1}\frac{\partial f_1}{\partial x_1}+\frac{2}{f_2}\frac{\partial f_2}{\partial x_1}+\frac{1}{f_4}\frac{\partial f_4}{\partial x_1}=0 \qquad \text{(d)}$$

Corda

$$\frac{1}{A}\frac{\partial A}{\partial X}+\frac{2}{B}\frac{\partial B}{\partial X}+\frac{1}{C}\frac{\partial C}{\partial X}=0 \qquad (16)$$

Corda's relabelling is clear, notwithstanding his rearrangement of Schwarzschild's equations to equal zero: $X=x_1$, $A=f_1$, $B=f_2$, $C=f_4$.

Corda's Eqs. (17) and (18) are relabelled copies of Schwarzschild's equations (*c'*) and (*c''*),

Schwarzschild

$$\frac{\partial}{\partial x_1}\left(\frac{1}{f_4}\frac{\partial f_4}{\partial x_1}\right)=\frac{1}{f_1 f_4}\frac{\partial f_1}{\partial x_1}\frac{\partial f_4}{\partial x_1} \qquad \text{(c')}$$

$$\frac{1}{f_4}\frac{\partial f_4}{\partial x_1}=\alpha f_1 \qquad (\alpha \textit{ integration constant}) \qquad \text{(c'')}$$

Corda

$$\frac{\partial}{\partial X}\left(\frac{1}{C}\frac{\partial C}{\partial X}\right)=\frac{1}{AC}\frac{\partial A}{\partial X}\frac{\partial C}{\partial X} \tag{17}$$

$$\frac{1}{C}\frac{\partial C}{\partial X}=\alpha A \tag{18}$$

"(where α is an integration constant)"

and his Eqs. (19) and (20) relabelled copies of Schwarzschild's next two but unnumbered equations, with Schwarzschild's latter equation multiplied by −1:

Schwarzschild

$$\frac{\partial}{\partial x_1}\left(\frac{1}{f_1}\frac{\partial f_1}{\partial x_1}+\frac{1}{f_4}\frac{\partial f_4}{\partial x_1}\right)=\left(\frac{1}{f_2}\frac{\partial f_2}{\partial x_1}\right)^2+\frac{1}{2}\left(\frac{1}{f_1}\frac{\partial f_1}{\partial x_1}+\frac{1}{f_4}\frac{\partial f_4}{\partial x_1}\right)^2$$

$$-2\frac{\partial}{\partial x_1}\left(\frac{1}{f_2}\frac{\partial f_2}{\partial x_1}\right)=3\left(\frac{1}{f_2}\frac{\partial f_2}{\partial x_1}\right)^2$$

Corda

$$\frac{\partial}{\partial X}\left(\frac{1}{A}\frac{\partial A}{\partial X}+\frac{1}{C}\frac{\partial C}{\partial X}\right)=\left(\frac{1}{B}\frac{\partial B}{\partial X}\right)^2+\frac{1}{2}\left(\frac{1}{A}\frac{\partial A}{\partial X}+\frac{1}{C}\frac{\partial C}{\partial X}\right)^2 \tag{19}$$

$$2\frac{\partial}{\partial X}\left(\frac{1}{B}\frac{\partial B}{\partial X}\right)=-3\left(\frac{1}{B}\frac{\partial B}{\partial X}\right)^2 \tag{20}$$

The relabelling is $X=x_1$, $A=f_1$, $C=f_4$, $B=f_2$. Note that Corda's Eq.(20) is Schwarzschild's second unnumbered equation multiplied through by −1.

Corda's Eqs.(21) and (22) are numbered and relabelled copies of Schwarzschild's very next two unnumbered equations,

Schwarzschild

$$\frac{1}{f_2}\frac{\partial f_2}{\partial x_1} = \frac{2}{3x_1 + \rho}$$

$$f_2 = \lambda(3x_1 + \rho)^{2/3} \quad (\lambda \textit{ integration constant})$$

Corda

$$\frac{1}{B}\frac{\partial B}{\partial X} = \frac{2}{3X + b} \tag{21}$$

$$B = d(3X + b)^{2/3} \tag{22}$$

"(where d is an integration constant)"

Once again Corda's relabelling of Schwarzschild's unnumbered equations is clearly evident: $B=f_2$, $X=x_1$, $d=\lambda$, $b=\rho$. To set $d=1$ Corda next invokes the same condition that Schwarzschild applied at his Eq.(10) to fix his $\lambda=1$:

Schwarzschild

$$f_2 = (3x_1 + \rho)^{2/3} \tag{10}$$

Corda

$$B = (3X + b)^{2/3} \tag{23}$$

The copy procedure continues, with Corda's reproduction of Schwarzschild's derivation in modified raiment. Indeed, immediately after his Eq.(23) Corda presents an unnumbered equation. The corresponding equation in Schwarzschild's paper is also unnumbered. They are as follows:

Schwarzschild

$$\frac{\partial f_4}{\partial x_1} = \alpha f_1 f_2 = \frac{\alpha}{f_2^2} = \frac{\alpha}{(3x_1 + \alpha)^{4/3}}$$

Corda

$$\frac{\partial C}{\partial X} = \alpha AB = \frac{\alpha}{B^2} = \alpha(3X+b)^{-\frac{4}{3}}$$

Here the relabelling is also obvious.

Corda's Eqs.(24) and (25) are again just relabelled copies of Schwarzschild's Eqs.(11) and (12) respectively:

Schwarzschild

$$f_4 = 1 - \alpha(3x_1 + \rho)^{-1/3} \tag{11}$$

$$f_1 = \frac{(3x_1 + \rho)^{-4/3}}{1 - \alpha(3x_1 + \rho)^{-1/3}} \tag{12}$$

Corda

$$C = 1 - \alpha(3X + b)^{-\frac{1}{3}} \tag{24}$$

$$A = \frac{(3X + b)^{-\frac{4}{3}}}{1 - \alpha(3X + b)^{-\frac{1}{3}}} \tag{25}$$

The relabelling is, $C=f_4$, $A=f_1$, $X=x_1$, $b=\rho$.

Corda's Eq.(26) is a relabelled copy of Schwarzschild's Eq.(13) and his three Eqs.(27) are relabelled combinations of Schwarzschild's unnumbered equations immediately following the latter's Eq.(13), as follows:

Schwarzschild

$$\rho = \alpha^3 \tag{13}$$

$$f_1 = \frac{1}{R^4}\frac{1}{1-\alpha/R}, \quad f_2 = f_3 = R^2, \quad f_4 = 1-\alpha/R$$
$$R = (3x_1+\rho)^{1/3} = \left(r^3+\alpha^3\right)^{1/3}$$

Corda

$$b = \alpha^3 \tag{26}$$

$$A = \left(r^3+\alpha^3\right)^{-\frac{4}{3}}\left[1-\alpha\left(r^3+\alpha^3\right)^{-\frac{1}{3}}\right]^{-1}$$
$$B = \left(r^3+\alpha^3\right)^{\frac{2}{3}} \tag{27}$$
$$C = 1-\alpha\left(r^3+\alpha^3\right)^{-\frac{1}{3}}$$

Clearly, from Schwarzschild's Eq.(13) Corda (Eq.(26)) has relabelled $b=\rho$ and from Schwarzschild's unnumbered equations, Corda (Eqs.(27)) relabelled $A=f_1$, $B=f_2$, $C=f_4$.

At his Eq.(28) Corda has simply reproduced Schwarzschild's Eq.(14)[3] wherein he has explicitly substituted Schwarzschild's $R = \left(r^3+\alpha^3\right)^{1/3}$, and altered the sequence of terms in the metric:

Schwarzschild

$$ds^2 = (1-\alpha/R)dt^2 - \frac{dR^2}{1-\alpha/R} - R^2\left(d\theta^2+\sin^2\theta\, d\varphi^2\right), \quad R = \left(r^3+\alpha^3\right)^{1/3} \tag{14}$$

Corda

$$ds^2 = \left[1-\frac{\alpha}{\left(r^3+\alpha^3\right)^{\frac{1}{3}}}\right]dt^2 - \left(r^3+\alpha^3\right)^{\frac{2}{3}}\left(\sin^2\theta\, d\varphi^2 + d\theta^2\right) + \frac{d\left(r^3+\alpha^3\right)^{\frac{2}{3}}}{1-\frac{\alpha}{\left(r^3+\alpha^3\right)^{\frac{1}{3}}}} \tag{28}$$

[3]See Eq.(1) herein.

Then, according to the standard practice of cosmology, Corda assigned, at his Eq.(30), by means of Newton's expression for escape speed, $\alpha=r_g=2GM/c^2$, and also, according to common cosmology practice, set $c=1$ and $G=1$ so that $\alpha=r_g=2M$, where M is alleged to be the mass that is the source of a gravitational field:

$$ds^2=\left[1-\frac{r_g}{\left(r^3+r_g^3\right)^{\frac{1}{3}}}\right]dt^2-\left(r^3+r_g^3\right)^{\frac{2}{3}}\left(\sin^2\theta\, d\varphi^2+d\theta^2\right)+ -\frac{d\left(r^3+r_g^3\right)^{\frac{2}{3}}}{1-\frac{r_g}{\left(r^3+r_g^3\right)^{\frac{1}{3}}}} \tag{30}$$

Corda then remarks,

> *"Historically, the line-element (30) represents `the original Schwarzschild solution' to Einstein field equations as it has been derived for the first time by Karl Schwarzschild in [3] with a slight different analysis."*

There are two additional problems here: (1) Schwarzschild [1] did not assign $\alpha=r_g=2M$ in his solution, as even a cursory reading of his original paper attests; (2) Corda's 'analysis' is nothing but a reproduction of Schwarzschild's derivation. Corda's *"slight different analysis"* is different only by his relabelling of the variables, functions and constants of Schwarzschild, with some rearrangement of terms and different numbering of equations, but otherwise precisely the same in every other respect by virtue of it being a reproduction.

At his Eq.(31) Corda relabelled Schwarzschild's 'auxiliary quantity' R,

<u>Schwarzschild</u>

$$R=\left(r^3+\alpha^3\right)^{1/3}$$

Corda

$$\hat{r} = \left(r^3 + r_g^3\right)^{\frac{1}{3}} \tag{31}$$

Here Corda has set $\hat{r} = R$ and r_g=α, where r_g=2M.

Finally, at his Eq.(32), Corda presents Schwarzschild's solution (the latter's Eq.(14)), again embellished with α=r_g, renumbering, and rearrangement of terms,

Schwarzschild

$$ds^2 = (1-\alpha/R)dt^2 - \frac{dR^2}{1-\alpha/R} - R^2\left(d\theta^2 + \sin^2\theta\, d\varphi^2\right), \quad R = \left(r^3 + \alpha^3\right)^{1/3} \tag{14}$$

Corda

$$ds^2 = \left(1 - \frac{r_g}{\hat{r}}\right)dt^2 - \hat{r}^2\left(\sin^2\theta\, d\varphi^2 + d\theta^2\right) - \frac{d\hat{r}^2}{1-\frac{r_g}{\hat{r}}} \tag{32}$$

wherein $\hat{r} = \left(r^3 + r_g^3\right)^{\frac{1}{3}}$, $r_g = \alpha$.

Since Corda's derivation of Schwarzschild's actual solution is nothing but a relabelled point by point copy of Schwarzschild's derivation, he has contributed nothing new to the solution of the problem.

3 The spherical surface

The surface embedded in Schwarzschild's metric is,

$$ds^2 = R^2\left(d\theta^2 + \sin^2\theta\, d\varphi^2\right) \tag{3.1}$$

This expression is an instance of the First Fundamental Quadratic Form of a surface. The intrinsic geometry of a surface is entirely independent of any space it which it might be embedded. The most important feature of the intrinsic geometry of a surface is its Gaussian curvature[4]. The Gaussian

[4] The Theorema Egregium of Gauss.

curvature K of the above surface is easily calculated at $K=1/R^2$ [7-11,14]. Herein is the true meaning of R. Hence, in Hilbert's metric $K=1/r^2$. Since K is a positive constant the surface (3.1) is a spherical surface [11,14]. Since they are non-Euclidean, r is neither the radius nor even a distance in the metrics of Schwarzschild or Hilbert. The 'Schwarzschild radius' is not the radius of anything in these metrics. Yet cosmology maintains that the 'Schwarzschild radius' or 'gravitational radius' (i.e. $r=r_g=2m$ in Hilbert's solution) is the radius of the event horizon of a black hole of mass m. On page 79 of his paper Corda conforms to cosmology:

> *"This assumption enables the origin of the coordinate system to be not a single point, but a spherical surface having radius equal to the gravitational radius, i.e. the surface of the Schwarzschild sphere. ... In fact, a coordinate transform that transfers the origin of the coordinate system, which is the surface having radius equal to the gravitational radius, in a non-dimensional material point in the core of the black hole, re-obtains the solution re-adapted by Hilbert."*

4 Corda's deformed circumference

Corda makes much of his function $m=m(r)$:

<u>Corda</u>

$$m=\frac{\left(r^3+\alpha^3\right)^{2/3}}{r^2} \tag{29}$$

On page 70 of his paper [3] he writes,

> *"... we will assume that the length of the circumference centred in the origin of the coordinate system is not $2\pi r$. We release an apparent different physical assumption, i.e. that arches of circumference are deformed by the presence of mass of the central body M."*

On page 73 he writes,

> *"Hence, we understand that the assumption to locate the mathematical singularity of the function A at X = 0 coincides with the physical condition that the length of the circumference*

centred in the origin of the coordinate system is $2\pi\left(r^3+\alpha^3\right)^{\frac{1}{3}}$, *which is different from the value* $2\pi r$. *This is the apparent fundamental physical difference between this solution and the 'standard Schwarzschild solution' (1), i.e. the one enabled by Hilbert ..."*

However, there is nothing either physically or mathematically meaningful in Corda's circumference assumption for the simple fact that he has confounded *r* in Schwarzschild's solution and *r* in Hilbert's solution as being the radial distance[5] in both. Moreover, Corda's *m* is nothing but a relabelling of Schwarzschild's *G*, i.e. *m*(*r*) = *G*(*r*), noted in §2 above, and so it already appears in Schwarzschild's Eq.(8), where it does not deform anything. This is easily seen by the fact that the length of a closed geodesic in the spherical surface embedded in Schwarzschild's metric is given by,

$$C = 2\pi R \tag{4.1}$$

which is indifferent to the functional form that *R* takes [5,6,10,11]. If *R*(*r*)=*r* then *C*=2π*r*; if $R=\left(r^3+\alpha^3\right)^{1/3}$ then $C=2\pi\left(r^3+\alpha^3\right)^{1/3}$; if $R=(\alpha-r)$ then $C=2\pi(\alpha-r)$. In Eq.(4.1) the quantity *R* does not care how its value is assigned, and neither does *C*[6].

Corda's function *m* deforms nothing, because it is simply the ratio of the Gaussian curvatures of two different spherical surfaces. Recall that the Gaussian curvature K_M of the spherical surface in Minkowski's metric is $K_M=1/r^2$ and the Gaussian curvature K_S of the corresponding spherical surface in Schwarzschild's metric is $K_S=1/R^2=1/\left(r^3+\alpha^3\right)^{2/3}$. Then,

---

[5] It is standard in cosmology to erroneously treat *r* in Hilbert's solution as radial distance, despite having numerous 'definitions' for it, as is particularly evident in the notion of the 'Schwarzschild radius' (i.e. the radius of the 'event horizon'); but it is in fact neither a radius nor a distance in the these metrics (see for example, [14]).

[6] Of course, the range on *r* in all cases must also be correctly specified.

$$m = \frac{\left(r^3 + \alpha^3\right)^{2/3}}{r^2} = \frac{R^2}{r^2} = \frac{K_M}{K_S} = G \tag{4.2}$$

which has nothing to do with a deformation of a circumference.

5 Gravitational collapse

In §3 of his paper, Corda mimics the analysis of Misner, Thorne and Wheeler [12], which he admits he reproduces, except for replacing their r with Schwarzschild's $R = \left(r^3 + \alpha^3\right)^{1/3}$, wherein Corda sets $\alpha = r_g = 2M$ (the 'Schwarzschild' or 'gravitational' radius). He has therefore not added anything new to the issue. In any event, mathematical and seemingly physical arguments for the extension of Schwarzschild's solution to $-\alpha \le r = \sqrt{x^2 + y^2 + z^2}$ are easily proven to require violation of the rules of pure mathematics, and so they are invalid.

6 The infinite equivalence class

The important issues are the invariant curvature scalars and the infinite equivalence class from which all admissible equivalent specific expressions of the solution for $R_{\mu\nu}=0$[7] are obtained.

The quantity R in Schwarzschild's solution and the quantity r in Hilbert's solution can be replaced by any analytic function $R_c(r)$ without violating $R_{\mu\nu}=0$ or spherical symmetry. However, not simply any analytic function of r is permissible for a solution to Einstein's 'gravitational field' $R_{\mu\nu}=0$. Satisfaction of the field equations is a necessary but insufficient condition. For example, replace Hilbert's r with $R_c(r)=e^r$. The resulting metric is singular only at $r=\ln(2m)$. At $r=0$ nothing special happens; on the unproven assumption that $r<\ln(2m)$ is permissible. But $R_c(r)=e^r$ is itself impermissible because the resulting metric is not asymptotically flat. The infinite equivalence class of permissible analytic functions $R_c(r)$ must be ascertained.

The metric for Minkoswki spacetime in Cartesian coordinates is,

---

[7] Einstein's 'Field Equations of Gravitation in the Absence of Matter' [13, §14].

$$ds^2 = c^2dt^2 - dx^2 - dy^2 - dz^2 \tag{6.1}$$

where c is the speed of light in vacuo[8]. Changing to spherical coordinates, Eq.(6.1) becomes,

$$ds^2 = c^2dt^2 - dr^2 - r^2\left(d\theta^2 + \sin^2\theta\, d\varphi^2\right) \tag{6.2}$$

which is spherically symmetric. The spatial section of Eq.(6.1) is,

$$ds^2 = dx^2 + dy^2 + dz^2 \tag{6.1b}$$

which is Euclidean. The spatial section of Eq.(6.2) is,

$$ds^2 = dr^2 + r^2\left(d\theta^2 + \sin^2\theta\, d\varphi^2\right) \tag{6.2b}$$

which is spherically symmetric about r=0 for three-dimensional Euclidean space.

Since at least 1896 it has been known that the most general metrical ground-form with spherical symmetry for three-dimensional space is,

$$ds^2 = A^2dR_c^2 + R_c^2\left(d\theta^2 + \sin^2\theta\, d\varphi^2\right) \tag{6.3}$$

where R_c=$R_c(r)$, A=$A(R_c(r))$, and $r = \sqrt{x^2 + y^2 + z^2}$ is the r in Eq.(6.2b). Eq.(6.3) is, in general, non-Euclidean. Note that Eqs. (6.1b), (6.2b) and (6.3) are positive definite, i.e. the signs of the coefficients of the differential elements are all positive[9]. Note also that if $R_c(r)$=r and $A(r)$=1, then the Euclidean Eq.(6.2b) is recovered.

The required infinite equivalence class must satisfy the following fundamental requirements, in accordance with Einstein's [4] prescription:

---

[8] That is, c=2.998x10^{8}m/s.

[9] The signature is fixed at (+,+,+).

1. it must be static,
2. it must be spherically symmetric,
3. it must satisfy $R_{\mu\nu}=0$,
4. it must be asymptotically flat.

The infinite equivalence class has been derived elsewhere [5,6,10,11,14-16], and it is given by,

$$ds^2 = \left(1-\frac{\alpha}{R_c}\right)dt^2 - \left(1-\frac{\alpha}{R_c}\right)^{-1} dR_c^2 - R\left(d\theta^2 + \sin^2\theta\, d\varphi^2\right) \qquad (6.4)$$
$$R_c = \left(\left|r-r_0\right|^n + \alpha^n\right)^{1/n}, \quad r, r_0 \in \Re, \quad n \in \Re^+$$

Here α is a positive real constant, r_0 and n entirely arbitrary constants. Note that the spatial section of Eq.(6.4) is precisely of the form of Eq.(6.3), generalised from Eq.(6.2b). Choosing $r_0=0$, $n=3$, $r \geq r_0$ produces Schwarzschild's solution Eq.(1.1). Choosing $r_0=0$, $n=1$, $r \geq r_0$ produces Brillouin's solution [17]. Choosing $r_0=\alpha$, $n=1$, $r \geq r_0$ produces Droste's solution [18]. However, Hilbert's solution is not an element of the infinite set (6.4), and thus it is not equivalent to Schwarzschild's solution, contrary to Corda's claims. Note that Hilbert's solution is specifically an alleged 'extension' of Droste's solution, and hence invalid by the very choice of Droste's solution (since selection of Droste's solution places the centre of a Euclidean sphere at the point (x_0,y_0,z_0) at the distance $r_0 = \sqrt{x_0^2 + y_0^2 + z_0^2} = \alpha$ from the origin of coordinates for Minkowski space). The reader can easily verify for himself that Eq.(6.4) satisfies all four conditions required by Einstein.

Since every element of Eq.(6.4) is equivalent, then if any element thereof can be 'extended' to form a black hole, then every element must be extendible in the same fashion. Conversely, if any element of Eq.(6.4) cannot be extended, then none can be extended, on account of equivalence. It is evident that no element of Eq.(6.4) can be extended to form a black hole because the latter requires that in Eq.(6.4), $0 \leq R_c$, which is impossible because $|r-r_0|^n$ is never less than zero. The metric Eq.(6.4) is singular at only one point, $r=r_0$. To amplify this fact, set $r_0=0$, $n=2$, such that $R_c = \left(r^2 + \alpha^2\right)^{1/2}$. Then the resulting metric is well defined for all real

values of r, except r=0. Note that $r^2 \geq 0$ and therefore $R_c \geq \alpha$ necessarily. Since this particular equivalent metric cannot be extended to produce a black hole, no element of Eq.(6.4) can be extended to produce a black hole, due to equivalence. Consequently, neither Droste's solution can be extended to yield Hilbert's 'solution' nor Schwarzschild's solution be extended to $-\alpha \leq r = \sqrt{x^2 + y^2 + z^2}$. Hilbert's solution is invalid and so the black hole is invalid. The theory of black holes requires that $|r-r_0|^n<0$, which is a violation of the rules of pure mathematics, and so the theory of black holes is false.

The role of r is now apparent. Consider a sphere of radius $r'=|r-r_0|$ in Euclidean 3-space (i.e. the spatial section of Minkowski spacetime) such that r and r_0 lie on the same radial line through the origin of coordinates r=0. Then the centre of the sphere is located at a point with Cartesian coordinates (x_0,y_0,z_0) at a distance $r_0 = \sqrt{x_0^2 + y_0^2 + z_0^2}$ from the origin of the coordinate system. The equation of this sphere in Cartesian coordinates is,

$$(x - x_0)^2 + (y - y_0)^2 + (z - z_0)^2 = (r - r_0)^2 = r'^2 \qquad (6.5)$$

Only when $x_0=y_0=z_0=0=r_0$, is the sphere centred at the origin of the coordinate system. In any case, the radius of the sphere is $|r-r_0|$ no matter where in Euclidean 3-space the sphere is centred, as illustrated in Fig.1[10].

The radius $|r-r_0|$ in Euclidean 3-space (i.e. the spatial section of Minkowski spacetime) is mapped by Eq.(6.4) into the corresponding radius

[10] The third dimension x has been suppressed for ease of illustration.

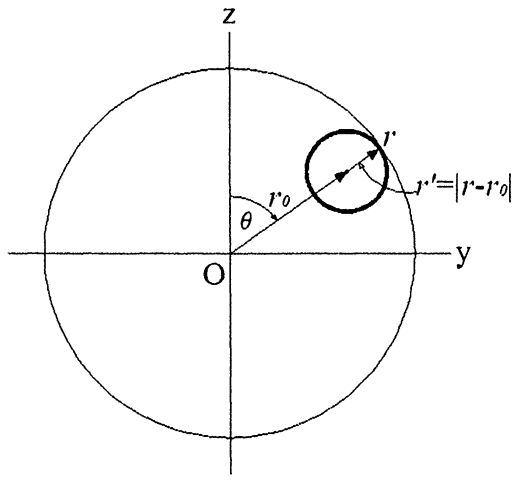

Fig. 1: A Euclidean sphere of radius r' centred at $r=r_0$ (Cartesian coordinates (x_0,y_0,z_0) at a distance $r = r_0 = \sqrt{x_0^2 + y_0^2 + z_0^2}$ from the origin O; r and r_0 lying in the same radial line through O). Schwarzschild centred at the origin O but Hilbert, by setting the coefficient of $(d\theta^2+\sin^2\theta d\varphi^2)$ at r^2, unwittingly centred at $r_0=\alpha=2m$ (see Eq.(6.4)), mistakenly thinking he had centred at $r=0$, thereby separating the sphere from its centre, misplacing its centre at $r=0$. In other words, Hilbert unwittingly moved Schwarzschild's Euclidean sphere in Minkowski space to $r=r_0$ leaving its centre behind at $r=0$. The large circle denotes a sphere relative to the origin of coordinates. The small circle denotes the sphere actually involved in Hilbert's solution. Thus, when $r'=0$, $r=r_0$, the latter misinterpreted as the radius of a black hole event horizon, with $r=0$ misinterpreted as an infinitely dense 'physical' singularity of a black hole, where spacetime curvature is 'infinite'*. Note that as r' grows its sphere engulfs the origin O and beyond, so none of Euclidean 3-space is left out. Cosmology however, seeks to stop at $r=0$, all the while attempting to drive the centre of the sphere r' down to $r=0$ when in fact it is at $r_0=\alpha=2m$. When $r=0$ in Hilbert's solution, the radius $r' = r = r_0 = \sqrt{x_0^2 + y_0^2 + z_0^2}$ and the centre of the sphere at (x_0,y_0,z_0), as Eq.(6.5) attests. Hilbert confounded the origin of the coordinate system for the centre of the Euclidean sphere, and so his solution is invalid.

---

*There are forces in General Relativity, but gravity is not one of them, because it is 'spacetime curvature'. Infinite spacetime curvature is therefore infinite gravity.

R_p in Schwarzschild non-Euclidean 3-space (i.e. the spatial section of Schwarzschild spacetime) [5,6,10,11,14-16].

$$R_p = \int \frac{dR_c}{\sqrt{1-\frac{\alpha}{R_c}}} = \sqrt{R_c(R_c-\alpha)} + \alpha \ln\left(\frac{\sqrt{R_c}+\sqrt{R_c-\alpha}}{\sqrt{\alpha}}\right) \tag{6.6}$$

$$R_c = \left(|r-r_0|^n + \alpha^n\right)^{1/n}, \quad r, r_0 \in \Re, \quad n \in \Re^+$$

Note that $R_p(r_0) = 0 \; \forall r_0 \; \forall n$ (the centre of the non-Euclidean sphere is located at $R_p(r_0)$, although the metric itself is undefined there (and only there). Also note that $R_c(r_0) = \alpha \; \forall r_0 \; \forall n$.

Following §3 above, $R_c(r)$ maps the Gaussian curvature $K=1/|r-r_0|^2$ of the spherical surface of a sphere centred anywhere in Minkowski spacetime, into the corresponding Gaussian curvature $K = 1/R_c^2$ of the spherical surface embedded in Schwarzschild spacetime.

Hence, in general, by Eq.(6.4) and Eq.(6.6), the radius $|r-r_0|$ of a Euclidean sphere centred at the point (x_0,y_0,z_0) in Minkowski spacetime is mapped into the corresponding radius R_p of a non-Euclidean sphere centred at $R_p(r_0)=0$ in Schwarzschild spacetime, and the Gaussian curvature $1/|r-r_0|^2$ of the spherical surface embedded in Minkowski spacetime is mapped to the corresponding Gaussian curvature $1/R_c^2$ of the spherical surface embedded in Schwarzschild spacetime. From this it follows that choosing $R_c(r)=r$ (i.e. $r_0=\alpha=2m$ and $n=1$ in Eq.(6.4)) shifts the centre of the Euclidean sphere associated with Hilbert's solution, to a point (x_0,y_0,z_0) at a distance $r_0 = \sqrt{x_0^2+y_0^2+z_0^2} = 2m$ from the origin of coordinates of the associated Euclidean space and so the radius of that Euclidean sphere is zero when $r=r_0=2m$, thereby making $R_p(r_0)=0$ in Schwarzschild spacetime. Note that r and r_0 are just distances (scalars) from the origin of coordinates and so vector notation is not required. Indeed, considering vectors $\mathbf{r}$ and $\mathbf{r_0}$, if they are collinear then the radius r' of the Euclidean sphere is $r'=|\mathbf{r}-\mathbf{r_0}| = |r-r_0|$ where $r=|\mathbf{r}|$ and $r_0=|\mathbf{r_0}|$. Consequently, when Hilbert set the coefficient of $(d\theta^2+\sin^2\theta d\varphi^2)$ to r^2, he unwittingly moved the centre of Schwarzschild's Euclidean sphere from $r=0$ to $r=2m$ so that instead of

$r = r' = \sqrt{x^2 + y^2 + z^2}$, he should have obtained $r = \sqrt{x_0^2 + y_0^2 + z_0^2} + \sqrt{(x - x_0)^2 + (y - y_0)^2 + (z - z_0)^2} = r_0 + r'$ so that when the radius r' of the Euclidean sphere, centred at the point (x_0, y_0, z_0), is zero, i.e. when $x = x_0$, $y = y_0$, $z = z_0$, $r = r_0 = \sqrt{x_0^2 + y_0^2 + z_0^2}$. Hilbert confounded the radius r' of the Euclidean sphere with the radius r from the origin of the coordinate system of the associated Euclidean space. This is amplified by the fact that since r and r_0 lie on the very same radial line through the origin of coordinates,

$$\sqrt{x^2 + y^2 + z^2} = \sqrt{x_0^2 + y_0^2 + z_0^2} + \sqrt{(x - x_0)^2 + (y - y_0)^2 + (z - z_0)^2} \quad (6.7)$$

so that when $x = x_0$, $y = y_0$, $z = z_0$, Eq.(6.7) reduces to the *identity*,

$$\sqrt{x_0^2 + y_0^2 + z_0^2} = \sqrt{x_0^2 + y_0^2 + z_0^2}$$

in which case,

$$r = r_0 = \sqrt{x_0^2 + y_0^2 + z_0^2}$$

because the radius r' of the Euclidean sphere has now converged to $r' = 0$ at the centre of the sphere, located at the point (x_0, y_0, z_0) at the distance $r = r_0 = \sqrt{x_0^2 + y_0^2 + z_0^2}$ from the origin of the coordinate system. The origin of the coordinate system of the spatial section of Minkowski spacetime is always at $r = 0$ but the centre of the Euclidean sphere need not be there - it can be placed anywhere, as Eq.(6.4) and Eq.(6.5) permit, illustrated in Fig.1.

If $\mathbf{r}$ and $\mathbf{r_0}$ are not collinear, then the radius vector $\mathbf{r'}$ of the Euclidean sphere is $\mathbf{r'} = (\mathbf{r} - \mathbf{r_0})$ the radius of that sphere is $r' = |\mathbf{r'}| = |\mathbf{r} - \mathbf{r_0}|$ (see Fig.2), and all other related expressions become, trivially, scalar functions of a vector variable:

$$R_p = \int \frac{dR_c}{\sqrt{1 - \frac{\alpha}{R_c}}} = \sqrt{R_c(R_c - \alpha)} + \alpha \ln\left(\frac{\sqrt{R_c} + \sqrt{R_c - \alpha}}{\sqrt{\alpha}}\right) \quad (6.8)$$

$$R_c = (|\mathbf{r} - \mathbf{r_0}|^n + \alpha^n)^{1/n}, \quad r, r_0 \in \Re, \quad n \in \Re^+$$

Then as $\mathbf{r} \rightarrow \mathbf{r}_0$, $\mathbf{r}' \rightarrow \mathbf{O}$ and $r' \rightarrow 0$.

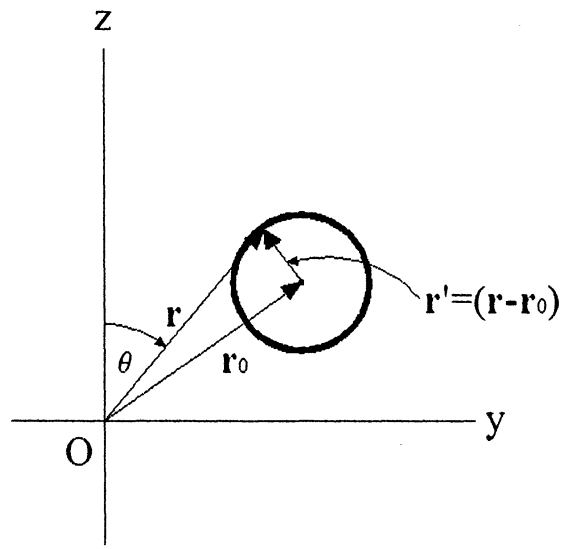

Fig. 2: The radius vector $\mathbf{r}'$ of the Euclidean sphere centred at the pointed end of the position vector $\mathbf{r}_0$ is $\mathbf{r}' = (\mathbf{r}-\mathbf{r}_0)$ and the radius of that sphere is $r' = |\mathbf{r}-\mathbf{r}_0|$. As the vector $\mathbf{r} \rightarrow \mathbf{r}_0$ the radius vector of the Euclidean sphere $\mathbf{r}' \rightarrow \mathbf{O}$ and so the radius $r' \rightarrow 0$.

Note that $|r-r_0|$ means that $(r-r_0)$ may be ≥ 0 or ≤ 0, or both. In fact, when $r=0$ the radius of the Euclidean sphere is $r'=|-r_0| = r_0=\sqrt{x_0^2+y_0^2+z_0^2}$. By elementary analytic geometry, r can take values less than zero because $-r$ is the radius pointing in the opposite direction to r.

Consider Schwarzschild's unnumbered equation, $3x_1=\alpha^3-\rho$. To eliminate the integration constant ρ he had two obvious choices, (a) $\rho=\alpha^3$ or (b) $\rho=0$. Schwarzschild chose (a) *"In order that this discontinuity coincides with the origin"* [1]. If he chose (b) he would have obtained Droste's solution [18], in which case the centre of the Euclidean sphere is moved along any radial line to the point (x_0,y_0,z_0), at the distance $r = r_0 = \sqrt{x_0^2+y_0^2+z_0^2}$ from the origin of coordinates (as depicted in Fig.1).

It follows that all the scalar curvature invariants are finite - contrary to cosmology, there are no curvature singularities anywhere [5-11,14,15,21].

7 Isotropic coordinates

The infinite equivalence class for Schwarzschild spacetime can be expressed in isotropic coordinates [14,15,19][11]:

$$ds^2 = \frac{\left(1-\frac{\alpha}{4R_c}\right)^2}{\left(1+\frac{\alpha}{4R_c}\right)^2} dt^2 - \left(1+\frac{\alpha}{4R_c}\right)^4 dR_c^2 - \left(1+\frac{\alpha}{4R_c}\right)^4 R_c^2\left(d\theta^2 + \sin^2\theta\, d\varphi^2\right)$$

$$R_c = \left[\left|r-r_0\right|^n + \left(\frac{\alpha}{4}\right)^n\right]^{1/n}, \quad r, r_0 \in \Re, \quad n \in \Re^+$$

The radius R_p is given by,

$$R_p = \int\left(1+\frac{\alpha}{4R_c}\right)^2 dR_c = R_c + \frac{\alpha}{2}\ln\left(\frac{4R_c}{\alpha}\right) - \frac{\alpha^2}{8R_c} + \frac{\alpha}{4}$$

Note that $R_p(r_0) = 0\ \forall r_0\ \forall n$ and $R_c(r_0) = \alpha\ \forall r_0\ \forall n$. Clearly no element of this infinite equivalence class can be 'extended' to produce a black hole, as amplified by the case r_0=0, n=2.

A similar result is obtained for the Reissner-Nordström solution in isotropic coordinates [14,15,19]. In no case can a black hole solution be obtained, for the reason that it constitutes a violation of the rules of pure mathematics in the same fashion as for Hilbert's solution.

8 Other black holes

The Kerr-Newman solution subsumes the Kerr, Reissner-Nordström, and Schwarzschild solutions. In similar fashion the Kerr-Newman configuration requires an infinite equivalence class for its solution. The infinite equivalence class is [14,15,20]:

---

[11] Here c=1.

$$ds^2 = -\frac{\Delta - a^2 \sin^2\theta}{\rho^2} dt^2 - \frac{2a \sin^2\theta \left(R_c^2 + a^2 - \Delta\right)}{\rho^2} dt d\varphi +$$

$$+ \frac{\left(R_c^2 + a^2\right)^2 - a^2 \Delta \sin^2\theta}{\rho^2} \sin^2\theta \, d\varphi^2 + \frac{\rho^2}{\Delta} dR_c^2 + \rho^2 d\theta^2$$

$$\Delta = R_c^2 - \alpha R_c + a^2 + q^2, \quad \rho^2 = R_c^2 + a^2 \cos^2\theta, \quad R_c = \left(\left|r - r_0\right|^n + \xi^n\right)^{1/n}$$

$$\xi = \frac{\alpha}{2} + \sqrt{\frac{\alpha^2}{4} - q^2 - a^2 \cos^2\theta}, \quad a^2 + q^2 < \frac{\alpha^2}{4}, \quad r, r_0 \in \Re, \quad n \in \Re^+$$

Note that no element of this infinite equivalence class can be extended to produce a black hole, once again amplified by the case r_0=0, n=2. Consequently there is no black hole. If there is no 'angular momentum', a=0 and the Reissner-Nordström solution is recovered. If charge q=0 the Kerr solution is recovered. If a=0 and q=0 the Schwarzschild solution is recovered. In all cases, contrary to cosmology, there are curvature singularities nowhere [14].

9 Conclusions

Corda's derivation of Schwarzschild's solution is merely a point by point reproduction of Schwarzschild's derivation, embellished with relabelling of Schwarzschild's variables and functions, renumbering of his equations, rearrangement of elements of his equations, and numbering of his unnumbered equations. Corda has thereby not advanced anything new to the solution of the problem.

Corda's claim that Schwarzschild's solution and Hilbert's solution are equivalent is demonstrably false. Droste's solution and Brillouin's solution are equivalent to Schwarzschild's solution. The solution to $R_{\mu\nu}$=0 requires an infinite equivalence class in order to provide for all permissible 'transformations of coordinates'. Hilbert's solution is not an element of the infinite equivalence class and is therefore invalid, amplified by the fact that Hilbert's solution is an alleged extension of Droste's solution, which cannot be extended by its very selection. The 'extension' of Droste's solution to Hilbert's solution to produce a black hole constitutes a violation of the rules of pure mathematics and so it is invalid. It is from the extension of Droste's solution that Hilbert enabled the black hole. Hence, the theory of black holes is invalid.

Corda's claim that *"the length of the circumference centred in the origin of the coordinate system is not $2\pi r$"* is false because the length of a closed geodesic in a spherical surface *always* has the form $2\pi R$, being indifferent to how R is assigned a value. Corda's assertion that r in Hilbert's solution and Schwarzschild's solution is radial distance therein, although standard cosmology, is demonstrably false. The 'Schwarzschild radius' is not the radius of anything, or even a distance, in the Schwarzschild metric or Hilbert's metric. It is therefore not the radius of a black hole event horizon.

Corda's [3] conclusion that *"... Hilbert was not wrong but they are definitely wrong the authors who claim that 'the original Schwarzschild solution' implies the non existence of BHs'"* is incorrect. The black hole is a product of violations of the rules of pure mathematics and therefore false. Schwarzschild's solution does not permit a black hole. Since the Michell-Laplace dark body does not share the properties of the black hole, it is not a black hole [14,22]. Hence, there is no legitimate mathematical theory of black holes.

References

[1] Schwarzschild, K., On the gravitational field of a mass point according to Einstein's theory. *Sitzungsber. Preuss.Akad.Wiss., Phys. Math. Kl.*, 189, (1916)

[2] Hilbert, D., *Nachr. Ges. Wiss. Göttingen, Math. Phys. Kl.*, 53 (1917)

[3] C. Corda, C., A Clarification of the Debate on "the Original Schwarzschild Solution", *EJTP*, **8**. No. 25, (2011) 65-82, http://arxiv.org/pdf/1010.6031v5

[4] Einstein, A., The Meaning of Relativity, Princeton University Press, (1988)

[5] Crothers, S.J., On the General Solution to Einstein's Vacuum Field and Its Implications for Relativistic Degeneracy, *Progress in Physics*, v.1, pp.68-73, (2005), http://vixra.org/pdf/1012.0018.pdf

[6] Crothers, S.J., A Short Discussion of Relativistic Geometry, *Bulletin of Pure and Applied Sciences*, Vol.24E (No.2) 2005: P.267-273, http://vixra.org/pdf/1208.0229v1.pdf

[7] Crothers, S.J., The Black Hole Catastrophe: A Short Reply to J. J. Sharples, *The Hadronic Journal*, **34**, 197-224 (2011), http://vixra.org/pdf/1111.0032v1.pdf

[8] Crothers, S.J., 'Flaws in Black Hole Theory and General Relativity', for the Proceedings of the XXIXth International Workshop on High Energy Physics, Protvino, Russia, (26-28 June 2013), http://vixra.org/pdf/1308.0073v1.pdf

[9] Crothers, S.J., The Schwarzschild solution and its implications for gravitational waves, for 'Mathematics, Physics and Philosophy in the Interpretations of Relativity Theory', Budapest, (4-6 September, 2009), www.sjcrothers.plasmaresources.com/Budapest09-b.pdf

[10] Crothers, S.J., On the Geometry of the General Solution for the Vacuum Field of the Point-Mass, *Progress in Physics*, v.2, pp.3-14, 2005, http://vixra.org/pdf/1101.0003v1.pdf

[11] Crothers, S.J., Gravitation on a Spherically Symmetric Metric Manifold, *Progress in Physics*, v2. pp.68-74, (2007), http://vixra.org/pdf/1101.0005v1.pdf
[12] Misner, C.W., Thorne, K.S., Wheeler, J.A., Gravitation, W.H. Freeman and Company, New York, (1973)
[13] Einstein, A., The Foundations of the General Theory of Relativity, *Annalen der Physik*, 49, (1916), in The Principle of Relativity, Dover Publications, Inc. (1952)
[14] Crothers, S.J., General Relativity: In Acknowledgement Of Professor Gerardus 't Hooft, Nobel Laureate, 4 August, 2014, http://vixra.org/pdf/1409.0072v7.pdf
[15] Crothers, S.J., On the Generation of Equivalent 'Black Hole' Metrics: A Review, *American Journal of Space Science*, July 6, 2015, DOI: 10.3844/ajssp.2015, http://vixra.org/pdf/1507.0098v1.pdf
[16] Crothers, S.J., The Painlevé-Gullstrand 'Extension' - A Black Hole Fallacy, *American Journal of Modern Physics*, Special Issue: Physics Without Higgs and Without Supersymmetry. Vol.5, Issue 1-1, February 2016, Pages:33-39, DOI: 10.11648/j.ajmp.s.2016050101.15, http://vixra.org/pdf/1512.0089v1.pdf
[17] Brillouin, M., The singular points of Einstein's Universe, *Journ. Phys. Radium*, v.23, 43, (1923)
[18] Droste, J., The field of a single centre in Einstein's theory of gravitation, and the motion of a particle in that field, *Ned. Acad. Wet.*, S.A., v.19, 197, (1917)
[19] Crothers, S.J., On Isotropic Coordinates and Einstein's Gravitational Field, *Progress in Physics*, v.3, pp.7-12, (2006), http://vixra.org/pdf/1101.0008v1.pdf
[20] Crothers, S.J., On the Ramifications of the Schwarzschild Space-Time Metric, *Progress in Physics*, v.1, pp.74-80, (2005), http://vixra.org/pdf/1101.0002v1.pdf
[21] Abrams, L.S., Black holes: the legacy of Hilbert's error. *Can. J. Phys.*, v.67, 919, (1989)
[22] McVittie, G.C., Laplace's Alleged 'Black Hole', *Observatory*, 98: 272-274 (Dec 1978)

HADRONIC JOURNAL 39, 227 - 252 (2016)

REINTERPRETATION OF THE LORENTZ 'LOCAL AND TRUE' TIMES WITHIN NON-RECIPROCAL VELOCITIES

Zbiegniew Oziewicz
Universidad Nacional Autónoma de México
Facultad de Estudios Superiores Cuautitlán, México
oziewicz@unam.mx, oziewicz.zbigniew@gmail.com

Received May 23, 2016
Revised June 25, 2016

Abstract

The central concept of relativity theory is **relative** velocity. The velocity of material body is not an intrinsic property of a body; it depends on a free choice of a reference body, it is reference-dependent.

Besides the reference-dependence, the velocity is non-unique **if and only if** it is **defined** by means of **the Lorentz boost.** Lorentz boost is generated by bivector and not by velocity vector. For initial and final vectors the generating bivector is non-unique. The velocity between two-body system defined in terms of the Lorentz boost does not exists without a choice of the measuring **third** body. The relative velocity given by the Lorentz boost is **ternary** given uniquely by ordered **triple** of time-like vectors, *i.e.* is dependent on the measurement by the **third** body - the reality is the measurement. The choice of the third body is the choice of his stabiliser **non-normal** subgroup, *i.e.* the **choice** of rotation **non-normal** subgroup of the Lorentz group. This necessarily extort non-uniqueness of the boost in the quotient loop (quasi-group with unit) of the Lorentz group modulo non-unique rotation subgroup, and leads to non-associative composition of velocities.

There is the conceptual challenge to symmetry-based and measurements-based relativity theory. Namely, the group-free and symmetry-

Copyright © 2016 by Hadronic Press, Inc., Palm Harbor, FL 34684, USA

free rival theory where the velocity is **postulated** to be **binary** given uniquely by ordered **pair** of time-like bodies, extorting the associative composition. However binary velocity must necessarily be **non-reciprocal** due to the relativity of simultaneity and due to the finite radiation-speed. This rival challenge pick up the philosophical path from the *relativity* of measurements to human-free absolute reality World, so much advocated by Max Karl Ernst Planck since 1924.

In the present note the relativity of simultaneity and relativity of time dilation are examined postulating non-reciprocal velocities within Lorentz-group-free rival theory.

2010 Mathematics Subject Classification. 51B20 Minkowski geometry, 53A17 Kinematics, 53A35 Non-Euclidean geometry, 53B30 Lorentz metric, 83A05 Special relativity

Physics and Astronomy Classification Scheme (PACS) - 2010. 02. Mathematical methods in physics 03.30.+p Special relativity

Keywords: philosophy and history of relativity theory, time-like body/observer, non-reciprocal velocity, relativity of simultaneity, time dilation, relativity groupoid as a category

Contents

1 Cartan in 1937: Lorentz boost by bivector **3**

2 Link problem raised by van Wyk in 1986 **6**

3 Woldemar Voigt in 1887 and Hendrik A. Lorentz in 1895 **7**

4 Rival relativity theories **10**

5 Herman Minkowski in 1908 **11**

6 Dilation of time-interval for non-reciprocal velocities **15**

6.1 Length contraction for non-reciprocal velocities 18

7 What inspired me to do this research? **18**

A Relativity of position-space **19**

B Material body is a time-like vector field **20**

1 Cartan in 1937: Lorentz boost by bivector

The ambient-metric tensor 'g' is **defined** as environment-medium dependent isomorphism from module of vector fields to the module of differential forms,

$$g \in \text{iso}(\text{Vector fields}, \text{Differential forms}). \tag{1.1}$$

The isomorphism (1.1) extends to algebra isomorphism of tensor, Grassmann and Clifford algebras. In particular if b is a Grassmann's bivector, then gb denotes the Grassmann biform. For example if $b = u \wedge v$, then $g(u \wedge v) \equiv (gu) \wedge (gv)$.

A scalar magnitude of a vector or a vector field, or a scalar magnitude of any Grassmann multivector, is seen in two steps:

- Firstly to a (muti)vector field X is assigned g-dependent differential (multi)form gX.
- The second step is the evaluation denoted by 'ev' - known variously as the trace or as a contraction. Evaluation of the differential 1-form gX with the 1-vector field Y, $(gX)Y$ is a scalar field.

Above two steps are in a place of historical symmetrical scalar (or dot) 'product',

$$(gX)Y \equiv X \cdot Y \equiv \text{ev}\{(gX) \otimes Y\} = \text{ev}\{(gY) \otimes X\}. \tag{1.2}$$

A Grassmann biform ω (as well as a Grassmann bivector) possesses several interpretations. A (homo)morphism (evaluation) from 1-vectors to 1-covectors, is not the only option, other examples

$$\omega \in \begin{cases} \text{Hom}\,(\text{2-vectors, scalars}) \\ \text{Hom}\,(\text{1-vectors, 1-covectors}) \\ \text{Hom}\,(\text{1-covectors, 3-covectors}) \end{cases} \tag{1.3}$$

Figure 1: Ambient environment dependent metric tensor g is wave-particle and vector-covector isomorphism

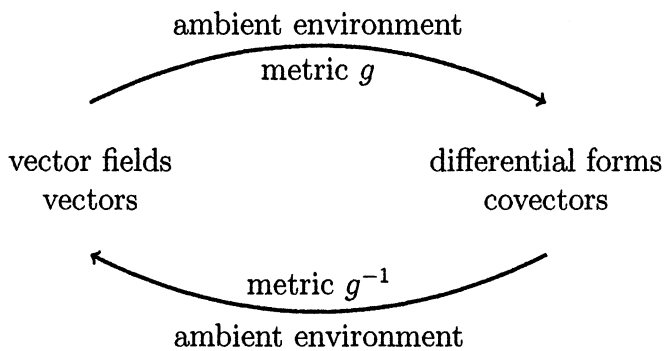

As well every Grassmann bivector can be seen as a morphism from covectors to vectors. An ambient-metric tensor g is an **isomorphism**,

$$g \in \text{iso}(\text{bivectors}, \text{bicovectors}), \quad \text{thus} \tag{1.4}$$

$$b \in \text{Hom}\,(\text{covectors}, \text{vectors}) \quad \Longleftrightarrow \quad gb \in \text{Hom}\,(\text{vectors}, \text{covectors}) \tag{1.5}$$

The morphisms (1.1)-(1.3)-(1.5) can be composed, $b \circ \omega, b \circ g \in \text{End}\,(\text{vectors})$ and, $\omega \circ b, g \circ b \in \text{End}\,(\text{covectors})$, are endomorphisms, and

$$gb = g \circ b \circ g. \tag{1.6}$$

For any triple of bivectors, b, b_1, b_2, and for any triple of bi-forms, $\omega, \omega_1, \omega_2$, the following reflexive ($\star \circ \star = \text{id}$) identities hold,

$$b_1 \circ \omega \circ b_2 + b_2 \circ \omega \circ b_1 + (b_1 \wedge b_2) \circ \omega = (\omega b_1) \cdot b_2 + (\omega b_2) \cdot b_1 \tag{1.7}$$

$$\omega_1 \circ b \circ \omega_2 + \omega_2 \circ b \circ \omega_1 + (\omega_1 \wedge \omega_2) \circ b = (\omega_1 b) \cdot \omega_2 + (\omega_2 b) \cdot \omega_1. \tag{1.8}$$

In particular from the above identities it follows that

$$4(b \circ \omega)\{(b \circ \omega) - \omega b\}^2 = (b \wedge b) \circ \omega \circ (\omega \wedge \omega) \circ b. \tag{1.9}$$

Clifford algebras, $\mathcal{C}\ell(g)$ and $\mathcal{C}\ell(g^{-1})$, with commutator give rise to Clifford Lie algebra. For Clifford bivectors, b_1 and $b_2 \in \mathcal{C}\ell(g)$ or $\in \text{End}\,(\mathcal{C}\ell(g))$, their Clifford product is denoted by juxtaposition $b_1 b_2$. The commutator of two Clifford bivectors is again a bivector,

$$[b_1, b_2] \equiv b_1 b_2 - b_2 b_1 \qquad \text{and} \qquad [b_1, b_2] \circ g = 2\,[b_2 \circ g, b_1 \circ g]. \tag{1.10}$$

Thus metric tensor g acts as the Lie algebra anti-isomorphism from the Lie algebra of Clifford bi-vectors to Lie algebra of g-skew-symmetric traceless endomorphisms, $b \longrightarrow b \circ g \in \mathrm{End}\,(\text{vectors})$.

The g-orthogonal Lie algebras are Lie algebras of Clifford **bivectors** (- and not of vectors!). This fact was stressed by Elie Cartan in his lectures in 1937 [Cartan *The Theory of Spinors*, Chapter I, subchapter IV *Bivectors and infinitesimal rotations*].

The Lorentz g-isometry, and in particular Lorentz boost, is some unit polynomial in $b \circ g$, where b is some Clifford bi-vector, and $(b \circ g)^* = -g \circ b$. Thus each boost, $p(b \circ g) \in \mathrm{End}\,(\text{vectors})$, is generated by bivector.

$$\{p(b \circ g)\}^{-1} = g^{-1} \circ \{p(b \circ g)\}^* \circ g = p(-b \circ g) \quad \in \mathrm{End}\,(\text{vectors}), \tag{1.11}$$

$$\left.\begin{aligned} M &= p(+b \circ g)\, N \\ N &= p(-b \circ g)\, M \end{aligned}\right\} \tag{1.12}$$

A scalar g-magnitude of a Clifford bivector b is defined as the evaluation of a biform gb on bivector b, *i.e.* $b^2 \equiv (gb)b = \mathrm{tr}(b \circ gb)$.

The identities (1.7)-(1.8) for $\omega = gb = g \circ b \circ g$, as in (1.6), give

$$2\,(b \circ g)^2 \circ b + (b \wedge b) \circ (gb) = 2b^2 \cdot b \tag{1.13}$$

$$2\,(g \circ b)^3 \circ g + (gb \wedge gb) \circ b = 2\,b^2 \cdot (g \circ b \circ g). \tag{1.14}$$

If a Clifford bivector is simple (decomposable), $b \wedge b = 0$, then

$$b \circ (gb) \circ b = b^2\, b \qquad \text{and} \qquad (gb) \circ b \circ (gb) = b^2\,(gb) \tag{1.15}$$

$$(b \circ g)^3 = b^2\,(b \circ g) \qquad \text{and} \qquad (g \circ b)^3 = b^2\,(g \circ b). \tag{1.16}$$

In this case (1.16) a g-isometry is given by any unit polynomial, *i.e.* polynomial invertible modulo an ideal $((b \circ g)^3 - b^2(b \circ g))$,

$$p(b \circ g) \in F[b \circ g]/\{(b \circ g)^3 - b^2(b \circ g)\}, \tag{1.17}$$

$$p(b \circ g) \;\cdot\; p(-b \circ g) = 1 \qquad \mathrm{mod}\ (\text{ideal}). \tag{1.18}$$

The convenient example is the following monic polynomial with $\det p = 1$, where the determinant of the polynomial is given by the regular (adjoint) representation in the quotient ring (1.17),

$$p(b \circ g) = \mathrm{id} + (b \circ g) + \frac{(b \circ g)^2}{1 + \sqrt{1 + b^2}} \tag{1.19}$$

2 Link problem raised by van Wyk in 1986

Van Wyk in 1986, and in 1991, raised a problem of expressing a Lorentz endomorphism of vectors, $p(b \circ g) \in \mathrm{End}\,(\text{vectors})$, in terms of initial and final vectors. Van Wyk concluded that 'even a given **pair** of initial vectors and pair of final vectors do not contain enough information to determine the Lorentz operator/endomorphism, $p(b \circ g)$, uniquely'.

The real reason for non-uniqueness of the Lorentz boost is that it is generated by bivector b, $p(b \circ g)$ (1.19), and it is not generated by a velocity vector. The following condition on a simple bivector b is necessary and sufficient condition to generate the boost $p(b \circ g)$ from an initial vector M to final vector N, with $M^2 = N^2$,

$$M \longrightarrow N = \{p(b \circ g)\}M \quad \text{if and only if} \quad b \wedge (M - N) = 0. \tag{2.1}$$

The condition (2.1) follows from polynomial (1.19). This means that for the given initial M and final N vectors, the generating bivector is not unique and therefore the Lorentz b-boost (2.1) is not unique. The trivial solution of the constraints (2.1) for unknown bivector b, for $M^2 = N^2 \neq 0$, is the following rather known identity [Fahnline 1982; Matolcsi 1994 II.1.3.8 pages 158-159],

$$\left\{p\left(\frac{M \wedge N}{M^2} \circ g\right)\right\} M \equiv N. \tag{2.2}$$

While Fahnline in 1982 stressed that it is not possible to prove that (2.2) is the only one Lorentz transformation $M \to N$, Matolcsi insisted to keep (2.2) with (1.19) as the **primordial definition** of the Lorentz boost, subject to extra conditions (rather artificial) that assure uniqueness.

Approach by van Wyk [van Wyk 1986, 1991] was different. Van Wyk was solving the following system of **two** equations for unknown bivector b (although bivector never appears explicitly in van Wyk publications), in terms of a given **pair** of initial and pair of final vectors, $M^2 = N^2$ and $P^2 = Q^2$,

$$\left.\begin{aligned} N &= \{p(b \circ g)\}\, M \\ Q &= \{p(b \circ g)\}\, P \end{aligned}\right\} \quad \Longleftarrow \quad b = (M - N) \wedge (P - Q). \tag{2.3}$$

The van Wyk link problem for a pair of vectors can be restated in terms of the link problem between bivectors. To express a generating bivector b

(not necessarily simple) of the Lorentz transformation/endomorphism $p(b \circ g)$ in terms of a priori given initial and final bivectors (not necessarily simple), F and G,

$$G = \{p(b \circ g)\} F \quad \text{with} \quad F^2 = G^2 \qquad \Longrightarrow \qquad b = b(F, G). \tag{2.4}$$

The bivector b on the right in (2.3) is a solution of the van Wyk system on the left, but it is given up to an arbitrary scalar, therefore it is still not unique solution as it is correctly concluded by van Wyk, that the **two** initial $\{M, P\}$ and their two final $\{N, Q\}$ vectors in a system (2.3) 'do not contain enough information to determine the Lorentz operator $p(b \circ g)$ uniquely'.

3 Woldemar Voigt in 1887 and Hendrik A. Lorentz in 1895

Following Hermann Weyl it is necessary to postulate that the spacetime manifold of **events** is an affine manifold with transitive and free action of Minkowski vector space on events [Weyl 1918 Kap. I §2]. Each ordered **pair** of events determine the unique Minkowski **interval-vector** between these events. Then every time-like reference body, as the corresponding idempotent observer, assign to interval-vector the split-coordinates $\{t, \mathbf{x}\}$ where coordinate 't' is interpreted as elapsed interval of time between these events, and a space-like radius-vector $\mathbf{x}$ denotes a distance between these events. For the fixed initial event one can identify the coordinate system $\{t, \mathbf{x}\}$ as coordinate system on spacetime manifold of single events. However the primordial concept is an absolute interval-vector between ordered pair of events, and reference-dependent laps of time between events and reference-dependent space-like distance between events are derived relative concepts. Therefore the postulate of affine structure of spacetime of events is crucial. Within a set of coordinates $\{t, \mathbf{x}\}$, interpreted either as laps of interval between **pair** of events, or as coordinates of an individual event for a fixed initial event, the time-like reference body (orthogonal to space-like $\mathbf{x}$) is implicit. The most interesting question is how these laps-coordinates, of the same fixed ordered **pair** of the reference-free events, must transform when the another time-like reference body will be chosen?

Woldemar Voigt in 1887 found coordinate transformations that left the d'Alembert–Laplace–Beltrami differential operator conformally invariant. The

coordinate transformations, see below (3.1)-(3.5)-(3.6), were independently rediscovered by Hendrik A. Lorentz in 1895. Lorentz introduced two scalar laps of time of the same pair of events relative to two reference bodies. These laps of times were called the true time and the local time. Let 'c' be the radiation speed, and '$\mathbf{r}_{\text{true}}$' and '$\mathbf{r}_{\text{local}}$' denotes the space-like interval-distance-vectors between two absolute events relative to two reference bodies,

$$c^2\{(t_{\text{true}})^2 - (t_{\text{local}})^2\} = (\mathbf{r}_{\text{true}})^2 - (\mathbf{r}_{\text{local}})^2. \tag{3.1}$$

The present knowledge of how two time-like vectors are related is sufficient to determine the coordinate transformations, however the concept of a reference body as a time-like vector field was invented by Hermann Minkowski not before 1908, but coordinate transformations were deduced early from the invariance of Maxwell equations (eventually reduced to the d'Alembert–Laplace–Beltrami differential operator). Invariance of the Maxwell equations is reduced to the invariance of the ambient-metric tensor 'g', and in this way the Lorentz g-isometry group, the group of symmetries of the metric-tensor 'g' enter to the game: the resulting transformation of coordinates is interpreted as a symmetry of the metric tensor.

In May 1904, Lorentz modified 'local time' in (3.5) by the Lorentz factor γ_{Lorentz} (already present in the Voigt publication in 1887) such that the Maxwell equations are identical (the same) for these coordinate systems. With this respect the contributions by Henri Poincaré are also very important (Poincaré 1900, 1904, 1905) as correctly emphasised by Logunov in 2004.

The Lorentz factor originate in the Lorentz isometry group and must be defined in terms of a generating bivector,

$$\begin{array}{rcl} p(b \circ g) & \rightsquigarrow & (\gamma_{\text{Lorentz}})^2 \equiv 1 + b^2 \\ \left.\begin{array}{r} b = \frac{P}{P^2} \wedge \sqrt{1+b^2}\,\mathbf{v} \\ (gP)\mathbf{v} = 0 \end{array}\right\} & \rightsquigarrow & (\gamma_{\text{Lorentz}})^2 \left(1 + \dfrac{\mathbf{v}^2}{P^2}\right) = 1. \end{array} \tag{3.2}$$

From bivector-dependent **definition** (3.2), for $P^2 = -c^2$, it follows the theorem, $(\gamma_{\text{Lorentz}})^2 \left(1 - \frac{v^2}{c^2}\right) = 1$.

Albert Einstein postulated the principle of reciprocity of velocities perfectly consistent with the Lorentz g-isometry group [Einstein 1905 §3 page 901],

$$\text{The Einstein reciprocity principle:} \quad \mathbf{v}^{-1} = -\mathbf{v}. \tag{3.3}$$

The inverse of the Lorentz boost by bivector, $b = \frac{P}{P^2} \wedge \gamma \cdot \mathbf{v}$, for a time-like P with $(gP)\mathbf{w} = 0$, see (1.11), is

$$\left\{ p\left(\left(\frac{P}{P^2} \wedge \gamma \cdot \mathbf{v} \right) \circ g \right) \right\}^{-1} = p\left\{ \left(\frac{P}{P^2} \wedge \gamma \cdot (-\mathbf{v}) \right) \circ g \right\}. \tag{3.4}$$

Let '$\mathbf{v}$' denotes the reciprocal velocity among two reference bodies, $\mathbf{v}^{-1} = -\mathbf{v}$, then

$$\begin{cases} t_{\text{local}} = \gamma \left(t_{\text{true}} - \dfrac{1}{c^2} \mathbf{v} \cdot \mathbf{r}_{\text{true}} \right). \\ t_{\text{true}} = \gamma \left(t_{\text{local}} + \dfrac{1}{c^2} \mathbf{v} \cdot \mathbf{r}_{\text{local}} \right). \end{cases} \tag{3.5}$$

The Voigt - Lorentz transformation (3.1)-(3.5) describe the time dilation, and are crucial for the Global Positioning System GPS of 24 satellites carrying atomic clocks [Neil Ashby 1998, 2002].

Hendrik Lorentz also in 1895 postulated the length contraction, the Lorentz contraction, that objects moving actually shrink. The length contraction comes from (3.1) and from the Lorentz transformation of space-like distance-vectors [Møller 1952 §18 formula (30); Fock 1955, 1959, 1961, 1964 §10 and §16; Jackson 1962, 1975 §11.3],

$$\begin{cases} \mathbf{r}_{\text{local}} = \mathbf{r}_{\text{true}} + \dfrac{\gamma^2}{\gamma+1} \left(\dfrac{\mathbf{v}}{c} \cdot \mathbf{r}_{\text{true}} \right) \dfrac{\mathbf{v}}{c} - \gamma\, \mathbf{v}\, t_{\text{true}}. \\ \mathbf{r}_{\text{true}} = \mathbf{r}_{\text{local}} + \dfrac{\gamma^2}{\gamma+1} \left(\dfrac{\mathbf{v}}{c} \cdot \mathbf{r}_{\text{local}} \right) \dfrac{\mathbf{v}}{c} + \gamma\, \mathbf{v}\, t_{\text{local}}. \end{cases} \tag{3.6}$$

In (3.5)-(3.6) the inverse transformations follows from replacement, $\mathbf{v} \longleftrightarrow -\mathbf{v}$, and by interchanging local $\longleftrightarrow$ true. The system (3.5)-(3.6) possesses the unique solution for the reciprocal velocity parameterising the Lorentz boost,

$$\mathbf{v} = 2 \left\{ 1 + \frac{1}{c^2} \left(\frac{\mathbf{r}_{\text{true}} - \mathbf{r}_{\text{local}}}{t_{\text{true}} + t_{\text{local}}} \right)^2 \right\}^{-1} \left(\frac{\mathbf{r}_{\text{true}} - \mathbf{r}_{\text{local}}}{t_{\text{true}} + t_{\text{local}}} \right). \tag{3.7}$$

The expression (3.7) for the reciprocal velocity was derived by Urbantke using reflections, *i.e.* involutive isometries, [Urbantke 2003, p. 115, formula (7)]. See also [Oziewicz & Page 2011] where (3.5)-(3.7) are derived from the Lorentz boost, $p(b \circ g)$, generated by a simple bivector.

3.1 Comment (Parallel axes). Following Einstein most frequent derivations of the Lorentz transformation (3.6) start with the assumption of the 'standard configuration' of the parallel axes [Einstein 1905 §3 page 897]. Then

$$\left.\begin{aligned} \mathbf{r}_{\text{true}} \wedge \mathbf{r}_{\text{local}} &= 0 \\ \mathbf{v} \wedge \mathbf{r}_{\text{true}} &= 0 \\ \mathbf{v} \wedge \mathbf{r}_{\text{local}} &= 0 \end{aligned}\right\} \iff \begin{aligned} \left(\frac{\mathbf{v}}{c} \cdot \mathbf{r}_{\text{true}}\right) \frac{\mathbf{v}}{c} &= \frac{\mathbf{v}^2}{c^2}\mathbf{r}_{\text{true}} = \frac{\gamma^2 - 1}{\gamma^2}\mathbf{r}_{\text{true}} \\ \left(\frac{\mathbf{v}}{c} \cdot \mathbf{r}_{\text{local}}\right) \frac{\mathbf{v}}{c} &= \frac{\mathbf{v}^2}{c^2}\mathbf{r}_{\text{local}} = \frac{\gamma^2 - 1}{\gamma^2}\mathbf{r}_{\text{local}} \end{aligned} \tag{3.8}$$

$$\begin{cases} \mathbf{r}_{\text{local}} = \gamma(\mathbf{r}_{\text{true}} - \mathbf{v}\, t_{\text{true}}) \\ \mathbf{r}_{\text{true}} = \gamma(\mathbf{r}_{\text{local}} + \mathbf{v}\, t_{\text{local}}) \end{cases} \tag{3.9}$$

4 Rival relativity theories

What it is the relativity *theory*? There are two rival philosophies.

All concepts are either Lorentz-group covariant or Lorentz-group invariant. The chief clue is either the Lorentz covariance or the Lorentz invariance.

Theory distribute all concepts into absolute (reference-body free) and relative that depends on the choice of the reference body. This approach is Lorentz-group free.

The central concept of relativity theory is **relative** velocity. Relativity of velocity means that the velocity is not absolute concept. The velocity of a material body is not an intrinsic property of a body; it depends on a free choice of a reference body, it is reference-dependent.

Besides of the obvious reference-dependence the velocity of a body N relative to body M is **non-unique if and only if it is defined** by means of the Lorentz boost by bivector given by unit polynomial, $p(b \circ g)$, *i.e.* iff the velocity is defined by factorisation of the Lorentz g-isometry group (**symmetry** of the metric-ambient tensor g) by **non-unique** rotation **non-normal** subgroup leaving measuring body intact. This leads to non-associative composition of isometric velocities, and necessarily implies non-uniqueness of the Lorentz boost from initial vector M to final vector N, observed by van Wyk through the numerical treatment in 1986 and analytic in 1991.

For a simple bivector b the Lorentz b-boost (1.19) depends on a free **choice** of a preferred time-like observer P,

$$\pm b = P \wedge (\pm \mathbf{w}) \quad \text{with} \quad (gP)\mathbf{w} \equiv \mathbf{0} \quad \text{and} \quad (gP)P = \det g. \tag{4.1}$$

4.1 Definition (Reciprocal velocity). The reciprocal velocity is defined uniquely by the ordered **triple** of time like vectors

$$\{P, M, N\} \longrightarrow \mathbf{v} \in \ker(gP), \qquad \mathbf{w} \equiv \gamma \cdot \mathbf{v} / \det g. \tag{4.2}$$

This reads: $\mathbf{v}$ is the velocity of N relative to M as measured/seen by P. The following equation (4.3) for the ordered triple of a priori given time like vectors $\{P, M, N\}$ possesses the **unique** solution for a ternary reciprocal space-like velocity $\mathbf{v} \in \ker(gP)$,

$$N = \left\{ p\left(\left(\frac{P}{P^2} \wedge \gamma \cdot \mathbf{v} \right) \circ g \right) \right\} M \qquad \Longrightarrow \qquad \mathbf{v} = \mathbf{v}^P_{MN} = -\mathbf{v}^P_{NM}. \tag{4.3}$$

$$\mathbf{v}^P_{MN} \simeq \frac{\mathrm{ev}_{gP}}{P^2} \{P \wedge (M - N)\} \tag{4.4}$$

The reciprocal velocity is measurement dependent: is **ternary** *i.e.* depends on the measurement by a freely chosen the measuring **third** body P (by preferred body). The reality is the measurement. The cases of the co-planar, $P \wedge M \wedge N = 0$, and non-planar, $P \wedge M \wedge N \neq 0$, are essentially distinct.

There is conceptual challenge to symmetry-based relativity theory. Namely the group-free rival theory implicitly presented in [Hermann Minkowski 1908], where space-like velocity is **postulated** to be binary on pair of time-like material bodies, extorting the associative composition. However it was not noticed that the binary velocity must necessarily be **non-reciprocal** due to the relativity of simultaneity and due to the finite radiation-speed. This rival challenge pick up the philosophical path from *relativity* of measurements to human-free *absolute* reality World, so much advocated by Max Karl Ernst Planck since 1924.

In the present note the relativity of simultaneity and the relativity of time dilation are reinterpreted within Lorentz-group-free theory postulating non-reciprocal binary velocities.

5 Herman Minkowski in 1908

The mainstream of Physics define the relative reciprocal velocity in terms of the Lorentz boost, however the boost by bivector, $p(b \circ g)$ (1.19)-(4.3), is ignored. Leonard Euler in 1754, and Minkowski in 1908 proposed group-free definition of relative velocity as binary, but non-reciprocal one.

Herman Minkowski published in 1908 *Die Grundlagen für die electromagnetischen Vorgänge in bewegten Körpen*, where introduced velocity among pair of normalized time-like bodies, however the **non-reciprocity** was not noticed.

5.1 Axiom (The Minkowski relativity principle (1908)). The relativity principle of **the absence of the privileged reference body** (**absence** of the privileged *time-like* vector field) was formulated by Hermann Minkowski in 1908 that the scalar field, $(gM)M$, must be independent of the **time-like** vector field M, - this scalar field must be expressed entirely in terms of ambient-metric tensor,

$$(gM)M = \det g. \tag{5.1}$$

Each time-like normalised body (5.1) possesses own clock - the own simultaneity differential form, and this give rise to idempotent endomorphism, mixed $(1,1)$-tensor, known as observer or as a product structure. Consider a pair of idempotent observers,

$$M \otimes \frac{gM}{\det g} \qquad \text{and} \qquad N \otimes \frac{gN}{\det g}. \tag{5.2}$$

5.2 Definition (Minkowski's factor). The Minkowski group-free scalar factor is defined as the following evaluation for all time-like normalised vector fields M and N,

$$\gamma_{MN} \equiv \frac{(gM)N}{\det g} = \frac{(gN)M}{\det g} = \gamma_{NM}; \qquad \gamma_{MM} \equiv 1. \tag{5.3}$$

5.3 Notation. In what follows, for a fixed time-like vector fields M and N, the symmetric Minkowski factor (5.3) is abbreviated by $\gamma \equiv \gamma_{MN}$.

5.4 Definition (Minkowski 1908 §11.6 before equation (46)). Minkowski introduced space-like binary velocity: $\mathbf{v}_{MN}$ is the velocity of a time-like body N relative to a reference time-like body M; M is an observer. An observed body N is an owner of the velocity $\mathbf{v}_{MN}$. The binary velocity $\mathbf{v}_{MN}$ by definition is a M-split of N and it is the Lorentz boost-free concept.

The binary split-velocity can be defined alternatively by two conditions:

- A spacelike vector $\mathbf{v}_{MN}$ is in the kernel of simultaneity differential form of an observer, $\mathbf{v}_{MN} \in \ker(gM)$, $(gM)\mathbf{v}_{MN} = 0$,

$$(\mathbf{v}_{MN})^{-1} \equiv \mathbf{v}_{NM} = -\gamma\,\mathbf{v}_{MN} - \left(\gamma - \frac{1}{\gamma}\right) M = -\frac{1}{\gamma}\,\mathbf{v}_{MN} - \left(1 - \frac{1}{\gamma^2}\right) N.$$

- $N \wedge (M + \mathbf{v}_{MN}) = 0.$

Thus explicitly the splits are as follows

$$\left.\begin{aligned} N &= \gamma\,(M + \mathbf{v}_{MN}) \\ M &= \gamma\,(N + \mathbf{v}_{NM}) \end{aligned}\right\} \quad \text{and} \quad \left\{\begin{aligned} \mathbf{v}_{MN} &\equiv \frac{1}{\gamma}\,N - M \\ \mathbf{v}_{NM} &\equiv \frac{1}{\gamma}\,M - N. \end{aligned}\right. \tag{5.4}$$

5.5 Corollary. The group-free binary split-velocities are **non-reciprocal,** $\mathbf{v}^{-1} \neq -\mathbf{v}$, - in contrast with the reciprocal velocities defined in terms of the Lorentz boosts $p(b \circ g)$.

$$\mathbf{v}^2 \equiv (\mathbf{v}_{MN})^2 = (\mathbf{v}_{NM})^2 = (-\det g)\left(1 - \frac{1}{\gamma^2}\right), \tag{5.5}$$

$$\mathbf{v}_{MN} + \mathbf{v}_{NM} = -\left(1 - \frac{1}{\gamma}\right)(M + N) \tag{5.6}$$

$$(\mathbf{v}_{MN} + \mathbf{v}_{NM})^2 = -2\,(\gamma - 1)\,\mathbf{v}^2, \qquad \mathbf{v}_{MN} \wedge \mathbf{v}_{NM} = \frac{\mathbf{v}^2}{\det g}\,N \wedge M. \tag{5.7}$$

Simultaneity is absolute iff $\gamma = 1$: $\frac{gN}{\det g}\,\mathbf{v}_{MN} = -\left(\gamma - \frac{1}{\gamma}\right).$

The common practice is to define reciprocal velocity in terms of the Lorentz boost, ignoring the boost by bivector, $p(b \circ g)$, in direction of a bivector $b = P \wedge \mathbf{w}$, for a preferred time-like reference body P, with $(gP)\mathbf{w} = 0$. This P is the **third** - measuring $\mathbf{w}$ - where $\{p(b \circ g)\}\,M = N$ gives a space-like velocity $\mathbf{w} = \mathbf{w}^P_{MN}$ of N relative to M as seen-measured by P.

Can we compose every **relative** velocity with every other *relative* velocity? To be **relative** means that one must keep the information of what concrete target-body velocity it is relative to what source-body. A target-body is an observed body possessing the velocity, and a source-body is a reference body, an observer laboratory, measuring this relative velocity. If a velocity of Sun relative to Earth, $\mathbf{v}(\text{Earth}, \text{Sun})$, and the velocity of Mars relative to Jupiter, is declared to be not composable, with meaningless composition, then a set of all relative velocities is a groupoid, a relativity groupoid. The composition of **relative** velocities is not always possible.

The **zero** velocity must also be relative [Oziewicz and Page 2010, 2012]. Every time-like body possesses the own zero-velocity relative to exactly this

body. Many distinct zeroth-velocities contradict to group structure. Therefore the relativity theory in terms of non-reciprocal velocities is formulated in the mathematical framework of the associative groupoid category, which is *not* a group.

The velocity of the bus relative to bus is zero, and street velocity relative to street is also zero. A concept of a material body, $M \simeq \mathbf{v}_{MM}$, should automatically distinguish zero-velocities, $\mathbf{v}_{MM} \neq \mathbf{v}_{NN}$ for $\mathbf{v}_{MN} \neq \mathbf{0}$. Each zero velocity is also a relative velocity, and not an abstract unique zero group-parameter. There must be as many relative zero-velocities as there are many timelike bodies $M \leftrightarrow \mathbf{0}_M$, $\mathbf{v}_{MM} \equiv \mathbf{0}_M \neq \mathbf{0}_N \equiv \mathbf{v}_{NN}$. The relativity theory can be formulated also as a **groupoid** of relative velocities-morphisms, and not necessarily as an isometry group parameterized in terms of abstract velocities.

One can consider the relativity *theory* as a **groupoid of non-reciprocal** velocities for the following reasons.

1. Theory distribute all concepts into absolute concepts that are reference-body free, and relative concepts that depends on a free choice of the reference time-like body.

2. It is reasonable to keep a separate zero-velocity for each time-like body, $M \mapsto \mathbf{v}_{MM} = \mathbf{0}_M$. Every time-like body possesses own zero velocity,

$$\mathbf{0}_M = \mathbf{v}_{MM} \neq \mathbf{v}_{NN} = \mathbf{0}_N. \tag{5.8}$$

   This groupoid possesses as many units=neutrals as many different time-like bodies,

$$\mathbf{v}_{MN} \circ \mathbf{0}_N = \mathbf{v}_{MN} = \mathbf{0}_M \circ \mathbf{v}_{MN} \tag{5.9}$$

3. The order of composition is important,

$$\mathbf{v}_{NM} \circ \mathbf{v}_{MN} = \mathbf{0}_N \neq \mathbf{0}_M = \mathbf{v}_{MN} \circ \mathbf{v}_{NM} \tag{5.10}$$

4. Not all velocities-morphisms are composable.

One must be aware that the Lorentz-group-free rival theory is not any kind of the Lorentz symmetry-violation theory. Observer-dependence within the relativity groupoid, and the Lorentz group-covariance, are **different** concepts, that can be eventually tested experimentally, for example in electromagnetism. The relativity principle of the **absence** of the privileged reference body is logically compatible with the relativity groupoid, and not necessarily exclusively with the Lorentz g-isometry group.

6 Dilation of time-interval for non-reciprocal velocities

Following Hermann Weyl [1918 Kap. I §2] consider spacetime manifold of **events** to be an affine manifold with transitive and free action of the Minkowski vector space on events. A pair of events, $\text{event}_{\text{initial}}$ and $\text{event}_{\text{final}}$, determine the unique Minkowski **interval-vector** between these events,

$$\text{Minkowski vector} = \overrightarrow{\text{event}_{\text{initial}}\ \text{event}_{\text{final}}} \tag{6.1}$$

Let X be such Minkowski interval-vector. Each time-like normalised vector $(gM)M = \det g$, and his companion idempotent observer (a product structure known as a split), $M \rightsquigarrow \frac{M \otimes gM}{M^2}$, assign to every interval-vector X the coordinates $\{t_M, \mathbf{x}_M\}$ of an interval in terms of a M-split of X, where

$$t_{MX} \equiv \frac{(gM)X}{\det g} \qquad \text{and} \qquad (gM)\,\mathbf{x}_M \equiv 0, \tag{6.2}$$

$$X = t_M\, M + \mathbf{x}_M = t_N\, N + \mathbf{x}_N = \ldots \tag{6.3}$$

Now, there are two alternative and exclusive approaches, how to relate coordinates of an interval (6.3) for the known velocity of M relative to an observer N and known velocity of N relative to a reference body M. Let $\mathbf{v}_{MN}$ denote the space-like velocity of time-like body N with respect to an observer M, and $\mathbf{v}_{NM}$ be a space-like velocity of M relative to an observer N, with $v^2 \equiv (\mathbf{v}_{MN})^2 = (\mathbf{v}_{NM})^2$. One alternative is the Einstein reciprocity principle stating that the relative velocities are reciprocal, $\mathbf{v}_{MN} + \mathbf{v}_{NM} = \mathbf{0}$. The Einstein principle is in the perfect symbiosis with the Lorentz boost. The only other alternative are non-reciprocal split-velocities that are not acceptable within the Lorentz isometries. These two alternatives are illustrated as follows

$$(\mathbf{v}_{MN})^{-1} \equiv \mathbf{v}_{NM} = \begin{cases} -\mathbf{v}_{MN} & \text{if } \mathbf{v} \text{ is reciprocal} \\ -\gamma\,\mathbf{v}_{MN} - \left(\gamma - \frac{1}{\gamma}\right) M & \text{if } \mathbf{v} \text{ is non-reciprocal} \\ -\frac{1}{\gamma}\mathbf{v}_{MN} - \left(1 - \frac{1}{\gamma^2}\right) N & \text{if } \mathbf{v} \text{ is non-reciprocal} \end{cases} \tag{6.4}$$

$$(\mathbf{v}_{MN} + \mathbf{v}_{NM})^2 = \begin{cases} 0 & \text{if } \mathbf{v} \text{ is reciprocal} \\ -2\,(\gamma - 1)\,v^2 & \text{if } \mathbf{v} \text{ is non-reciprocal} \end{cases} \tag{6.5}$$

$$\mathbf{v}_{MN} \cdot \mathbf{v}_{NM} = \begin{cases} -v^2 & \text{if } \mathbf{v} \text{ is reciprocal} \\ -\gamma\, v^2 & \text{if } \mathbf{v} \text{ is non-reciprocal} \end{cases} \tag{6.6}$$

$$(\mathbf{v}_{MN} \wedge \mathbf{v}_{NM})^2 = \begin{cases} 0 & \text{if } \mathbf{v} \text{ is reciprocal} \\ (\gamma^2 - 1)\, v^4 & \text{if } \mathbf{v} \text{ is non-reciprocal} \end{cases} \tag{6.7}$$

With the reciprocity principle. The Einstein reciprocity principle is **the most important axiom** of special relativity theory. Reciprocity of velocity is in the perfect harmony with the Lorentz g-isometry,

$$\text{The Einstein reciprocity principle:} \qquad \mathbf{v}_{MN} + \mathbf{v}_{NM} = \mathbf{0}.$$

As an axiom is a pre-conception that can be accepted or not accepted, but cannot be proved in terms of another independent assumptions. Friend-colleague claim that the Einstein principle is an experimental fact, however no direct experimental verification of (6.4)-(6.7) is known. The experimental consequences of (6.4)-(6.7) in electromagnetism are possible. It is commonly assured that the Einstein reciprocity principle is so obvious that 'require no proof in an introductory course of special relativity' [Silagadze 2008 page 816]. Silagadze suggest that such proof exists in reality, however in my opinion this is impossible, because the Einstein reciprocity principle is a primordial axiom of special relativity theory that cannot be deduced logically from axioms independent from Lorentz g-isometry.

Rejecting the reciprocity principle. There is no obligation to accept the Einstein reciprocity principle and mandatory use the Lorentz transformation for group-covariant and group-invariant concepts. Instead, one can accept non-reciprocal velocities, for absolute versus relative concepts, that are in the perfect harmony with the relativity of simultaneity

$$\left.\begin{array}{lll} M = \gamma_{NM}(N + \mathbf{v}_{NM}) & \text{with} & (gN)\mathbf{v}_{NM} = 0 \\ N = \gamma_{MN}(M + \mathbf{v}_{MN}) & \text{with} & (gM)\mathbf{v}_{MN} = 0 \end{array}\right\} \tag{6.8}$$

6.1 Definition (Poynting vector)**.** The light-like radiation L possessing the energy E_{ML} relative to reference M, also possesses the Poynting vector, the radiation velocity vector relative to M denoted by $\mathbf{c}_{ML}$. This Poynting vector

is defined in terms of M-split of L, $L = E_{ML}(M + \mathbf{c}_{ML})$. This implies that the radiation speed, $c_g \equiv (\mathbf{c}_{ML})^2$, is the reference-body free, but ambient -metric dependent, g-dependent radiation scalar speed, as demonstrated by the French physicist Foucault in 1850,

$$L^2 = 0 \qquad \Longrightarrow \qquad \det g + (c_g)^2 = 0 \tag{6.9}$$

The dilation of time interval within the Lorentz boost by bivector 'b', $p(b \circ g)$, (1.19), looks like

$$\left.\begin{aligned} t_M &= \gamma\, t_N - \frac{1}{c^2}\,(g \circ (p(+b \circ g)N))\mathbf{x}_N \\ t_N &= \gamma\, t_M - \frac{1}{c^2}\,(g \circ (p(-b \circ g)M))\mathbf{x}_M \end{aligned}\right\} \tag{6.10}$$

In (6.10) the inverse transformation is equivalent with reciprocity axiom/principle, by interchanging the reference time-like bodies $M \longleftrightarrow N$, and replacing $+\mathbf{w}$ by $-\mathbf{w}$ (or replacing a bivector $+b$ by $-b$ in (3.2)-(1.12)-(1.19)).

In alternative theory with non-reciprocal velocities (6.4)-(6.7), the dilation of time interval and his inverse possesses **two independent** expressions. The inverse follows from interchanging $M \longleftrightarrow N$, but it is forbidden to replace $\mathbf{v}_{NM}$ by $-\mathbf{v}_{MN}$,

$$\left.\begin{aligned} t_M &= \gamma\left(t_N - \frac{\mathbf{v}_{NM}\cdot\mathbf{x}_N}{c^2}\right) \\ t_N &= \gamma\left(t_M - \frac{\mathbf{v}_{MN}\cdot\mathbf{x}_M}{c^2}\right) \end{aligned}\right\} \tag{6.11}$$

6.2 Comment. In the terms of **non-reciprocal** velocities, (6.4)-(6.7), the relative simultaneities are given as follows

$$\begin{aligned} dt_N &= \gamma\left(dt_M - \frac{1}{c^2}\, g\mathbf{v}_{MN}\right). \\ dt_M &= \gamma\left(dt_N - \frac{1}{c^2}\, g\mathbf{v}_{NM}\right). \end{aligned} \tag{6.12}$$

Proof. The binary velocities as the split of differential forms are as follows

$$\left.\begin{aligned} gN &= \gamma\,(gM + g\,\mathbf{v}_{MN}) \\ gM &= \gamma\,(gN + g\,\mathbf{v}_{NM}) \end{aligned}\right\} \tag{6.13}$$

The Lorentz's scalar times $\{t_M, t_N\}$ imply the following differential forms and their relations to Minkowski's speed,

$$\left.\begin{array}{l} gM = (\det g)\, dt_M \\ gN = (\det g)\, dt_N \end{array}\right\} \quad \Longrightarrow \quad \left\{\begin{array}{l} \gamma = Nt_M = \left(\frac{\partial t_M}{\partial t_N}\right)_{x_N,\ldots} \\ \gamma = Mt_N = \left(\frac{\partial t_N}{\partial t_M}\right)_{x_M,\ldots} \end{array}\right. \tag{6.14}$$

Inserting (6.14) into (6.13) gives (6.12). □

6.1 Length contraction for non-reciprocal velocities

The essence of the length contraction (as well as of time dilation) is seen from the splits of interval-vector, (6.3) with (3.1), and these splits do not need a priori the choice of relative velocities as reciprocal or non-reciprocal. However the explicit dependence on relative velocities is interesting,

$$\mathbf{x}_M = \mathbf{x}_N + \gamma^2 \frac{\mathbf{v}_{NM} \cdot \mathbf{x}_N}{c^2}\, \mathbf{v}_{NM} - \gamma^2\, \mathbf{v}_{NM}\, t_N - \left\{(\gamma^2 - 1)\, t_N - \gamma^2\, \frac{\mathbf{v}_{NM} \cdot \mathbf{x}_N}{c^2}\right\} N. \tag{6.15}$$

$$\mathbf{x}_N = \mathbf{x}_M + \gamma^2 \frac{\mathbf{v}_{MN} \cdot \mathbf{x}_M}{c^2}\, \mathbf{v}_{MN} - \gamma^2\, \mathbf{v}_{MN}\, t_M - \left\{(\gamma^2 - 1)\, t_M - \gamma^2\, \frac{\mathbf{v}_{MN} \cdot \mathbf{x}_M}{c^2}\right\} M. \tag{6.16}$$

The inverse transformation (6.16) follows from (6.15) by interchanging $M \longleftrightarrow N$, but it is forbidden to replace $\mathbf{v}_{NM}$ by $-\mathbf{v}_{MN}$. The space intervals, $\mathbf{x}_M$ and $\mathbf{x}_N$ are space-like as well as both relative velocities, $\mathbf{v}_{MN}$ and $\mathbf{v}_{NM}$. The main difference of (6.15)-(6.16) when compared with the Lorentz transformation (3.6), are the orthogonal time-like components in the transformed space intervals due to non-reciprocity of velocities.

7 What inspired me to do this research?

Albert Einstein in 1905 introduced the velocity of k-system relative to a reference K-system and this is interpreted as obvious pre-conception that for the given two reference systems k and K there exists the only **one unique** velocity of k relative to K :

> Es werde nun dem Anfangspunkte des einen der beiden Systeme (k) eine Geschwindigkeit **v** in Richtung der wachsenden x des anderen, ruhenden Systems (K) erteilt, ...
>
> Albert Einstein 1905 §3 page 897

Such natural pre-conception suggest that one can construct this unique binary velocity from the given ordered pair of time-like vectors (or vector fields) as the K-split of k, and the inverse velocity of K relative to k as the k-split of K. This is because each time-like vector gives rise to idempotent observer $K \rightsquigarrow \frac{K \otimes_g K}{K^2}$. Immediately was crystal clear that these binary unique split-velocities cannot be reciprocal contrary to the Einstein Reciprocity Principle stated after next four pages on page 901. From this follows the suspicion that while the binary split-velocities are non-reciprocal but unique, therefore the Einstein reciprocal velocities could be non-unique! Moreover the uniqueness implies the associative composition, whereas the composition of the Einstein reciprocal velocities is non-associative that contradicts with wrong pre-conception of uniqueness! This rise the problem to determine all possible the Einstein reciprocal velocities for a priori given ordered pair of reference systems. This problem was the starting point of this research resulting in conclusion that each reciprocal velocity is ternary as given by the ordered triple of time-like vectors.

Acknowledgments

I am grateful to William (Bill) S. Page, at Thousand Islands Parkway, Mallorytown, Ontario, Canada, for stimulating correspondence, for critics, and useful email discussions.

A Relativity of position-space

Hermann Weyl in his monograph published in 1918, considered a spacetime of events as an affine space with an action of Minkowski vector space on manifold of events. Affine spacetime was adopted by Tamás Matolcsi in monograph *Spacetime Without Reference Frames* [1994], where 'without reference frame' should read 'without bases and without coordinate system', but **with** the concept of a reference system as a time-like vector field. The first part of Matolcsi's monograph, 30% of entire book, is devoted to Galilean

absolute simultaneity called non-relativistic model = the absolute simultaneity. The central subject of Matolcsi's monograph is the concept of the split-velocity (5.4) that is exactly the same as the Matolcsi definition in Part I, §6.2.2, except that the concept of binary velocity do not needs affine structure. Tamás Matolcsi in Part I, §7.1.3 stress

> It is an **important** fact that the spaces of different ... observers are *different affine spaces* ...

Albert Einstein's opinion is rather opposite, that relativity of space is not important:

> In Newtonian mechanics there is relativity of space; assertion that two events were in the same place does not possesses absolute meaning (independent of reference system). However this relativity of space **does not play any role** in the development of theory.
>
> Albert Einstein, The Meaning of Relativity 1922, ... 1955
> Stafford Little Lectures at Princeton University, May 1921

B Material body is a time-like vector field

A reference system is a material body with a positive mass. A name 'frame' is avoided because a frame is a synonym of a basis in a vector space or a basis in a module, and bases are not used in the present basis-free note. A **body** need not to be a frame, need not to be a tetrad. The relativity theory is about the concept of a relative velocity. The velocity of a material body is relative to another material reference body, is relative to **the choice** of the reference body with a positive mass. The relativity theory is the theory of the reference bodies. If a concept of a material body is not defined or is not precise, then the concept of velocity is meaningless. The zero mass radiation and light cannot be considered to be a reference system.

The definition of a material deformable body comes from the fluid mechanics and from fluid dynamics, and is known as the Euler derivative alias the substantial or material, or barycentric, or hydrodynamic derivative, in terms of the partial derivations. In fluid context material body/fluid is a **vector** field. Within the relativity of simultaneity it was Minkowski who in 1908 defined a body as the time-like vector field.

The Euler body/fluid is given solely by *one alone* basis-free vector field.

B.1 Definition (The Euler definition of a fluid). The vector fields, M and N, in terms of conserved scalar integrals of motion, in adopted coordinate systems, are equivalent to the fundamental theorem of the ordinary differential equations,

$$\begin{aligned}(dx^1_M)\wedge(dx^2_M)\wedge(dx^3_M)\wedge(dt_M)\neq 0,\\ (dx^1_N)\wedge(dx^2_N)\wedge(dx^3_M)\wedge(dt_N)\neq 0,\end{aligned} \tag{B.1}$$

$$\left.\begin{aligned}&(dx^i_M)M = M\,x^i_M = 0\\ &(dt_M)M = M\,t_M = 1\\ &\Longleftrightarrow\quad M=\left(\tfrac{\partial}{\partial t_M}\right)_{x_M,\ldots}\end{aligned}\right\}\qquad \left\{\begin{aligned}&(dx^i_N)N = N\,x^i_N = 0\\ &(dt_N)N = N\,t_N = 1\\ &\Longleftrightarrow\quad N=\left(\tfrac{\partial}{\partial t_N}\right)_{x_N,\ldots}\end{aligned}\right. \tag{B.2}$$

$$\begin{aligned}x_M\quad &\text{is an } M\text{-space}\quad\Longleftrightarrow\quad M\,x_M=0,\\ x_N\quad &\text{is an } N\text{-space}\quad\Longleftrightarrow\quad N\,x_N=0.\end{aligned} \tag{B.3}$$

The vector fields (B.2) are basis-free (frame-free, tetrad-free) and are defined in terms of the conserved scalar fields $\{x^i_M, x^i_N\}$.

Each body/fluid is completely defined in terms of a scalar conserved functions, for example x_M-system is a street, and x_N-system is a bus. Here $\{x^i_M\}$ and $\{x^i_N\}$ are functions on space-time of events, and two events, e_1 and e_2 are on the same **place/position** for an x_M-observer if and only if, $x^i_M(e_1) = x^i_M(e_2) \in \mathbb{R}$.

The scalar fields $\{t_M, t_N\}$ in (B.2), are two times introduced by Woldemar Voigt in 1887 and by Hendrik A. Lorentz in 1895.

According to Euler the material body is a deformable fluid given in terms of a vector **field** M on space-time, defined in terms of the conserved scalar integrals of motion,

$$Mx_M \equiv 0,\quad \text{and}\quad 1 = Mt = M(t+x_M) = M(t+x_M+x^2_M+\ldots) \tag{B.4}$$

$$\Longleftrightarrow\quad M=\left(\frac{\partial}{\partial t}\right)_{x_M} \tag{B.5}$$

It is evident that the scalar field 't' in (B.5) is a fiction, vector field M has no information about a scalar t.

Every body 'at rest' in position-space in fact is moving in space-time of events in own future. Material body is an iso-position **process** (absolute traveller) in an analogy with iso-processes in thermodynamics.

A coordinate x_M is an integral of motion of a street M, whereas x_N is an integral of motion of a bus N. The derivative of x_M along the street-vector-

field M is zero, $Mx_M \equiv 0$ and $Mt_M = 1$. A bus N, as a vector field in a space-time, is defined by another two conditions, $Nx_N \equiv 0$ and $Nt_N \equiv 1$.

B.2 Clarification. In the original Euler publications *simultaneity* was assumed to be absolute (for the infinite radiation speed), therefore the Minkowski factor was absent, $\gamma \equiv 1$. Nevertheless below the Minkowski factor is left explicitly that reader will easily recognise the similarity among the Euler and Minkowski ideas. The best *notation* to re-express the Euler invention of the fluid relative velocity as the vector field was invented in thermodynamics.

B.3 Definition (The Euler relative velocity)**.** In the notation borrowed from thermodynamics for *iso*-processes the Euler definition of the velocity of the fluid N relative to the reference fluid M reads,

$$\mathbf{v}_{MN} \equiv \frac{1}{\gamma}\left(\frac{\partial}{\partial t_N}\right)_{x_N,\ldots} - \left(\frac{\partial}{\partial t_M}\right)_{x_M,\ldots}$$
$$\Longrightarrow \quad \gamma \cdot (\mathbf{v}_{MN} x_M) = \left(\frac{\partial x_M}{\partial t_N}\right)_{x_N} = N x_M. \quad \text{(B.6)}$$

Euler accepted the Galilean - Newtonian absolute simultaneity, $\gamma = 1$, $dt \equiv dt_M \equiv dt_N$,

$$\mathbf{v}_{MN} \equiv \left(\frac{\partial}{\partial t}\right)_{x_N^1, x_N^2, x_N^3} - \left(\frac{\partial}{\partial t}\right)_{x_M^1, x_M^2, x_M^3} = N - M. \quad \text{(B.7)}$$

In the Fluid Dynamics textbooks the Euler relative velocity (B.7), the vector field $\mathbf{v}_{MN}$ depending on the choice of the variable reference body M, is presented wrongly as the scalar product of the field velocity '$\mathbf{v}$' considered to be a set of scalar components, $\mathbf{v} \equiv \{v^1, v^2, \ldots\}$, with the 'gradient operator', $\nabla = \frac{\partial}{\partial \mathbf{r}} \equiv \{\frac{\partial}{\partial x_M^1}, \ldots\}$, *i.e.* $\mathbf{v}_{MN} = \mathbf{v} \cdot \frac{\partial}{\partial \mathbf{r}} = \mathbf{v} \cdot \nabla$. In such bad notation (in fact no scalar product is involved) the velocity of a body/fluid N - *relative* to a reference body/fluid M, is lost. Moreover in textbooks the **variable** reference body/fluid M is denoted simply by $M = \frac{\partial}{\partial t}$ - leaving out the obvious integrals of motion $\{x_M^1, \ldots\}$ of M, $Mx_M^i = 0$. Then, the body/fluid N, the owner of this Euler's relative velocity (B.7), is denoted badly by, $N = \frac{D}{Dt} = \left(\frac{\partial}{\partial t}\right)_{x_N^1, \ldots}$, and is called variously to be the convective derivative, or the Lagrangian derivative,

$$\frac{D}{Dt} = \frac{\partial}{\partial t} + \mathbf{v} \cdot \nabla \qquad \Longleftrightarrow \qquad N = M + \mathbf{v}_{MN}. \quad \text{(B.8)}$$

The textbooks on Fluid Dynamics and Hydrodynamics do not wish to see a body or a fluid in terms of the scalar integrals of motion of the corresponding vector fields. If one wish to leave out the different integrals of motions in (B.7), one can get visual - notational - nonsense that $M = N$. For this reasons the Euler body/fluid N is denoted by, $N = \frac{D}{Dt}$, to be different from $M = \frac{\partial}{\partial t}$. The coincidence of the Euler definition of the fluid velocity relative to the reference fluid/body 'at rest', with the Minkowski definition (5.4) is crystal clear.

References

Ashby Neil, Relativistic effects in the global positioning system. In: Naresh Dadhich and Jayant Narlikar, Editors, *Gravittion and Relativity: At the turn of the Millenium.* 15th Conference on General Relativity and Gravitation. Inter-University Centre for Astronomy and Astrophysics, India 1998. ISBN 81-900378-3-8

Ashby Neil, Relativity and the global positioning system. Physics Today **55** (5) (May 2002) 41-47

Cartan Élie Joseph. *Leçons sur la théorie des spineurs I, II.* Paris 1937, 1938; *The Theory of Spinors.* Hermann et Cie, Paris 1966; MIT Press, Cambridge 1966; Dover 1981

Einstein Albert. Zur Electrodynamik bewegter Körper. Annalen der Physik (Leipzig) **17** (1905) 891-921

Fahnline Donald E. A covariant four-dimensional expression for Lorentz transformations. American Journal of Physics **50** (9) (September 1982) 818-821

Fradkin David M. Representation of the active Lorentz transformation for particle dynamics. Journal of Mathematical Physics **23** (12) (December 1982) 2520-2523

Galison Peter, Minkowski Space-Time: from visual thinking to the Absolute World. Historical Studies in the Physical Sciences **10** (1979) pp. 85-121

Galison Peter, Einstein's Cloks, Poincaré Maps - Empires of Time. Norton & Company New York 2003

Logunov A. A., Henri Poincaré and Relativity Theory, arXiv:physics/0408077 v3 23 August 2004

Lorentz Hendrik H., Versuch einer Theorie der elektrischen und optischen Erscheinungen in bewegten Körten [1895]. In Hendrik H. Lorentz, Collected Papers, Volume 5. The Hague: Martinus Niehoff 1937 pp. 1-139

Lorentz Hendrik H., Electromagnetic Phenomena in a System Moving with Any Velocity Smaller Than That of Light. In Proceedings of the Royal Academy of Amsterdam **6** (1904) pp. 809-832

Matolcsi Tamás, Spacetime without Reference Frames, Budapest: Akadémiai Kiadó 1994, ISBN 9630564335. Part One Spacetime Models: Chapter I Non-Relativistic Model; Chapter II Relativistic Models. Part Two Mathematical Tools: Chapter VI Affine Spaces

Minkowski Hermann (1908) Die Grundlagen für die electromagnetischen Vorgänge in bewegten Körpen, Nachrichten von der König. Gesellschaft der Wissenschaften zu Göttingen, Mathematisch-Physikalische Wiss. Klasse, 53–111

- Reprinted in: Minkowski Hermann *Gesammelte Abhandlungen* Unter Mitwirkung A. Speiser, H. Weyl, Hrsg. David Hilbert. Leipzig, Berlin: B. G. Teubner 1911, Bd. 2. S. 352–404
- The French translation by Paul Langevin, manuscript at: http://hal.archives-ouvertes.fr/hal-00321285/fr/.
  Paul Langevin, inventor of the twin paradox, paradox known also as the Langevin paradox.
- The fundamental equations for electromagnetic processes in moving bodies, http://en.wikisource.org, in: The Principle of Relativity, Calcutta University Press 1920, pp. 1–69. Translated by Megh Nad Saha.
- The Russian translation in: *Einsteinian Sbornik 1978-1979* Moskva: Nauka 1983, pages 5-63
- Hermann Minkowski, The fundamental equations for electromagnetic processes of mobil bodies, pages 1–45, translated by A. F. Kracklauer 2010

Minkowski Hermann (paper written by Max Born after Minkowski's death in 1909) (1910) Eine Ableitung der Grundgleichungen für die electromagnetischen Vorgänge in bewegten Körpern vom Standpunkt der Electronentheorie, Math. Ann. **68** (1910) 526–556

Oziewicz Zbigniew, and William S. Page 2010. Zero velocity must be relative. Draft of 42 pages

Oziewicz Zbigniew, and William S. Page. Concepts of relative velocity. Electronic Journal of Theoretical Physics **Zacatecas II** (2011) pages 31-43. arXiv:1104.0684v1 [physics.gen-ph] March 30, 2011

Oziewicz Zbigniew, and William S. Page 2012. The many relative spaces-of-locations of Galileo and Poincaré. *Proceedings of the Natural Philosophy Alliance* Volume **9** (Eagan MN USA: NPA) pp 406-409
ISBN 978-1-105-95509-9

Planck Max Karl Ernst, Vom Relativen zum Absoluten. Lecture in Münich 1924. Leipzig 1925. Naturwissenschaften **13** (1925) 52-59. In: Max Planck, Wege zur physikalischen Erkenntnis (1933) 128-146

Planck Max Karl Ernst, Zwanzig Jahre Arbeit am physikalischen Weltbild. Vortrag, gehalten am 18 Februar 1929 an der Universität Leiden. Physica **9** (1929) 193-222

Planck Max Ernst, Eight Lectures on Theoretical Physics. Trans. A. P. Wills. Mineola, New York Dover Publications

Poincaré Henri, La théorie de Lorentz et le principe de réaction, 1900. In Oeuvres Volume 9 (1954) pp. 464-493

Poincaré Henri. L'État actuel et l'avenir de la physique mathématique. The Present State and Future of Mathematical Physics. Bulletin des Sciences Mathématiques **28** (1904) pp. 302-324. Presented in September 1904 at International Congress at St. Louis, Missouri, USA.

Poincaré Henri. Sur la dynamique de l'électron. C. R. Acad. Sci. **140** (1905) 1504-1508

Silagadze Z. K., Relativity without tears. Acta Physica Polonica **B 39** No 4 (2008) pages 811-885

Urbantke Helmuth K., Lorentz transformations from reflections: some applications, Foundations of Physics Letters **16** (2) (2003) 111-117

Voigt Woldemar, Über das Doppler'sche Princip. Göttinger Nachrichten Ges. Wiss. (1887) pages 41- 45

Wyk van C. B. Lorentz transformations in terms of initial and final vectors. Journal of Mathematical Physics **27** (5) (1986) 1306; 1311-1314

Wyk van C. B. The Lorentz operator revisited. Journal of Mathematical Physics **32** (2) (February 1991) 425-430

HADRONIC JOURNAL 39, 253 - 269 (2016)

DOPPLER'S RELATIVITY OF RADIATION ENERGY VERSUS COMPTON SCATTERING/REFLECTION

Zbiegniew Oziewicz
Universidad Nacional Autónoma de México
Facultad de Estudios Superiores Cuautitlán, México
oziewicz@unam.mx, oziewicz.zbigniew@gmail.com

Received June 1, 2016

Abstract

Police radar transmits a radio wave that upon striking on car is reflected back to the radar-gun and, it is assured in the texts, that a Doppler shift occurs in the frequency and calculates the car's speed. It is assured that radar-gun used by police operate on Doppler phenomena. The Doppler discovery was the *relativity* of the radiation energy: radiation energy depends on the choice of the reference body. Another phenomena is the Compton scattering of the radiation (that include the reflections from a car) under energy-momenta *conservation*. This rise the question whether the radar-gun used by police must operate on Doppler's relativity of energy, or rather on Compton's conservation of energy-momenta.

Physics and Astronomy Classification Scheme (PACS) - 2010. 03.30.+p Special relativity, 11.30.-j Conservation laws, 42.62.-b Laser applications, 95.30.-k Fundamental aspects of astrophysics, 98.80.Hw Mathematical and relativistic cosmology

2000 Mathematics Subject Classification. 51B20 Minkowski geometry, 53A17 Kinematics, 53A35 Non-Euclidean geometry, 53B30 Lorentz metric, 83A05 Special relativity.

Keywords: Doppler's relativity of radiation energy, Compton scattering and Compton reflexion, time-like reference body, relativity theory, stellar aberration

Copyright © 2016 by Hadronic Press, Inc., Palm Harbor, FL 34684, USA

Contents

1 Police radar speed-gun **2**
1.1 John Henry Poynting's vector field 4

2 Rival theories **5**

3 Einstein's theory of Doppler and abberation **5**
3.1 Frequency zero shift does not implies zero velocity 8
3.2 Redshift factor determine interval of speeds 9

4 The Einstein formula for the reflexion of radiation from a moving mirror **10**

5 The Compton scattering and the Compton reflexion **12**

A Transformation of Poynting vectors **14**

1 Police radar speed-gun

Let $\mathbf{F}$ denotes an electromagnetic bivector-field introduced by Hermann Minkowski in 1908. A bivector $\mathbf{F}$ can be interpreted also as a morphism from a module of differential forms to module of vector fields (from covectors to vectors). How radiation light-like **vector** (a radiation light-like ray) can be defined in terms of electromagnetic bivector?

An ambient-metric tensor g (ambient-dependent 'line-element') is **defined** as an isomorphism from module of vector fields to module of differential forms; for a vector field L, gL denotes the corresponding differential form. Let a vector L be an eigenvector of $(\mathbf{F} \circ g) \neq 0$,

$$\mathrm{ev}_{gL}\,\mathbf{F} \equiv (\mathbf{F} \circ g)L = \lambda \cdot L \quad \Longrightarrow \quad \lambda \cdot L^2 = 0$$
$$\text{and} \quad \{(\mathbf{F} \wedge \mathbf{F}) \circ g\}L = 2\lambda \cdot (L \wedge \mathbf{F}). \quad (1.1)$$

Therefore for $\lambda \neq 0$ the eigenvector L must be light-like. A pure (null) radiation field $\mathbf{F}$ is defined by the two conditions,

$$\det(\mathbf{F} \circ g) = 0 \qquad \text{and} \qquad \mathrm{tr}\{(\mathbf{F} \circ g)^2\} = 0. \qquad (1.2)$$

Therefore for a pure radiation field $\mathbf{F}$, an endomorphism $(\mathbf{F} \circ g)$ possesses only zero eigenvalue. Fortunately the Cartan identity gives an independent condition

$$\mathrm{ev}_{gL}(L \wedge \mathbf{F}) + L \wedge (\mathrm{ev}_{gL}\,\mathbf{F}) = L^2 \cdot \mathbf{F}. \tag{1.3}$$

When $L \wedge \mathbf{F} = 0$ ($\Longrightarrow$ $\mathbf{F} \wedge \mathbf{F} = 0$) then, $L^2 \cdot \mathbf{F} = 0$, and therefore $(\mathbf{F} \circ g)$-eigenvector L must be light-like independently of the eigenvalue, and can be identified with the zero mass radiation if additionally $L \wedge \mathbf{F} = 0$.

Police radar, speed-gun, invented in 1954, transmits a radio wave in the microwave band that upon striking on a car (or on any other object) is reflected back to the radar-gun and it is assured in the texts that a Doppler shift occurs in the frequency and calculates the car's speed. It is assured that radar-gun used by police operate on Doppler's phenomena. The Christian Doppler discovery in 1842 was the *relativity* of the radiation energy/colour: radiation energy depends on the choice of the reference body. With respect to a system of three reference bodies the given radiation possesses *three* different energies (*i.e.* three different frequencies). The zero mass radiation possesses the absolute light-like energy-momenta but if a reference body is not selected then does not exists the relative energy/frequency of radiation. Thus the radiation energy is the explicit function of two variables, depends on a time-like reference body and depends on a light-like radiation.

As an example let choose the *three* reference bodies to stress that the number of the reference bodies need not to be restricted to two bodies as it is present in all texts dealing with the Doppler's relativity of radiation energy. One can measure the stellar energy from the Earth four months apart (and not necessarily six months apart as measured by Christian Doppler in 1842) - thus one can imagine three Earths on the same Sun's orbit.

The postulate of the **absence** of the privileged time-like reference body is expressed as reference-body-**free** normalisation, but an ambient-dependent. Say, for the **three** time-like bodies M, N, and P, the ambient-dependent normalisation is postulated as follows

$$(gM)M = (gN)N = (gP)P = \det g. \tag{1.4}$$

With respect to above time-like reference bodies (1.4) the radiation L possesses **three** distinct relative energies, videlicet

$$E_{ML} \qquad \text{and} \qquad E_{NL} \qquad \text{and} \qquad E_{PL}. \tag{1.5}$$

1.1 John Henry Poynting's vector field

John Henry Poynting (1852-1914), student of James Clerk Maxwell, observed in 1884 that the light possesses momentum vector, the Poynting vector.

Light-like radiation L also possesses as many distinct space-like Poynting vector fields as many there are distinct time-like reference bodies. The Poynting vector of a radiation L relative to a time-like body M is denoted by $\mathbf{c}_{ML}$, postulating, $(gM)\mathbf{c}_{ML} \equiv (g\mathbf{c}_{ML})M \equiv 0$. In terms of space-like electric field $\mathbf{E}$ and magnetic excitation $\mathbf{H}$, both M-dependent, $(gM)\mathbf{E} \equiv 0 = (gM)\mathbf{H}$, the Poynting vector can be expressed using Hodge star isomorphism,

$$\mathbf{c}_{ML} \equiv \star(\mathbf{E} \wedge M \wedge \mathbf{H}), \quad \text{where} \quad \mathbf{E} \equiv \frac{\mathrm{ev}_{gM}}{\det g}\mathbf{F}, \quad \star\mathbf{B} \equiv \frac{gM}{\det g} \wedge \mathbf{F}. \tag{1.6}$$

The ambient-dependent radiation speed (the phase speed) is denoted by $c_g \equiv c/n$, where n is the refraction index of the medium. Thus relative to the three reference bodies there are the following splits of L-radiation,

$$L = E_{ML}(M + \mathbf{c}_{ML}) = E_{NL}(N + \mathbf{c}_{NL}) = E_{PL}(P + \mathbf{c}_{PL}) = \ldots, \tag{1.7}$$

$$(gL)L = 0 \quad \Longrightarrow \quad \det g = -(g\mathbf{c}_{ML})\,\mathbf{c}_{ML} = -(g\mathbf{c}_{NL})\,\mathbf{c}_{NL} = -c_g^2. \tag{1.8}$$

$$\text{Thus:} \qquad E_{ML} \equiv \frac{(gM)L}{\det g} \qquad \text{and} \qquad \mathbf{c}_{ML} \equiv (\det g)\frac{L}{(gM)L} - M. \tag{1.9}$$

The radiation energy depends implicitly also on ambient tensor g (depends on physical environment g) and therefore the radiation energy depends implicitly on refraction index. Therefore the gravitational, cosmological and environmental Doppler redshifts are always presented implicitly, as it is the case in the present note.

Another phenomena is the Compton scattering of the radiation, including reflections from a car, under energy-momenta *conservation.* This rise the question whether the radar gun used by police should operate on Doppler's relativity of energy, or rather on Compton's conservation of energy-momenta.

2 Rival theories

Binary velocity $\mathbf{v}_{MN}$ of a time-like body N relative to the time-like reference body M is given uniquely by ordered pair of time-like vectors with $(gM)\mathbf{v}_{MN} \equiv 0$. The binary velocity of N relative to M is given by M-split of N. Whereas the ternary velocity $\mathbf{v}^P_{MN} = -\mathbf{v}^P_{NM}$ is a velocity of a body N relative to body M as measured by a body P with $(gP)\mathbf{v}^P_{MN} = 0$. Therefore the ternary velocity is given by an ordered **triple** of time-like bodies. The binary velocity was implicitly introduced by Hermann Minkowski in 1908 [Minkowski 1908 §11.6 before equation (46)], though it was not realised that the binary split-velocity cannot be reciprocal.

The Minkowski factor is denoted by $\gamma_{MN} \equiv \frac{(gM)N}{\det g} = \gamma_{NM}$. Let v be a bounded scalar speed between bodies M and N, $v < c_g$, and let $\gamma \equiv \gamma_{MN}$. Thus,

$$v^2 \equiv (\mathbf{v}_{MN})^2 = (\mathbf{v}_{NM})^2, \qquad \gamma^2\left(1 - \frac{v^2}{c_g^2}\right) \equiv 1, \tag{2.1}$$

$$(\mathbf{v}_{MN} + \mathbf{v}_{NM})^2 = -2\,(\gamma - 1)\,v^2. \tag{2.2}$$

Within the Lorentz boost the relative velocities are reciprocal. Therefore non-reciprocal binary velocities (2.2) give rise to the conceptual challenge to symmetry-based relativity theory. The group-free rival theory **postulate** space-like binary non-reciprocal velocities (2.1)-(2.2).

3 Einstein's theory of Doppler and abberation

Albert Einstein deduced the Doppelersche Prinzip and as well the expression for the James Bradley stellar aberration of the angles from the *relativity* of the electric and magnetic fields: the electric and magnetic fields depend on the choice of the reference body [Einstein 1905, Sections 7-8, *Theory of Doppler's Principle and Aberration*, pages 910-915].[1] The both expressions, Doppler and Bradley's aberration, are already on Einstein's page 911.

Similarly to M-split of the light-like L (L seen by time-like reference body M at rest, (1.7)), there are N-split and P-split etc, of any time-like M, under

[1]The relativity of the electric and magnetic fields do not need the Lorentz covariance [Oziewicz 2008; Ivezić 2010; Oziewicz 2011].

the postulate that $(gM)\mathbf{v}_{MN} \equiv 0$ for all timelike M, N, and P, in terms of binary non-reciprocal split-velocities,

$$\begin{aligned} M &= \gamma_{NM}(N + \mathbf{v}_{NM}) = \gamma_{PM}(P + \mathbf{v}_{PM}) = \dots \\ N &= \gamma_{MN}(M + \mathbf{v}_{MN}) = \gamma_{PN}(P + \mathbf{v}_{PN}) = \dots \\ P &= \gamma_{MP}(M + \mathbf{v}_{MP}) = \gamma_{NP}(N + \mathbf{v}_{NP}) = \dots \\ \dots &= \dots \end{aligned} \tag{3.1}$$

$$\Longrightarrow \quad \det g = (\gamma_{NM})^2 \left(\det g + (\mathbf{v}_{NM})^2\right) \quad \Longrightarrow \quad (\mathbf{v}_{NM})^2 = (\mathbf{v}_{MN})^2. \tag{3.2}$$

How distinct energies (1.5) of light-like L, (1.5), are related in terms of the scalar speeds among M, N and P? In fact the scalar speed is not sufficient to determine the Doppler expression deduced by Einstein. The Doppler expression relating the above energies depends on the angle between the direction of the Poynting vector of radiation and direction of the *vector* of the relative velocity between bodies M and N, as observed **either** by the reference body M, and, as observed by the reference body N. We are obliged to consider together **two** cases, M as the reference body, and also N as the reference body, because these distinct observations involve distinct aberration angles. Simultaneity of M and N are different: an angle as observed by body M is between space-like vectors in the kernel of simultaneity differential form of M. Simultaneity is relative: M-simultaneity is different form N-simultaneity. The space-like velocity of N relative to M is tangent to the crest of M-simultaneity differential form, and therefore cannot be reciprocal (cannot be collinear) with the velocity of M relative to N. Instead, Einstein on page 901 [Einstein 1905 §3 pages 901-902] postulated the reciprocity principle of relative velocity, $\mathbf{v}^P_{MN} + \mathbf{v}^P_{NM} = \mathbf{0}^P$, (collinearity of the inverse velocity with direct velocity) that is perfectly consistent with the Lorentz transformations.[2]

These two different observations of radiation L, either M is chosen to be at rest, or N is chosen to be at rest, leads to *two independent* Doppler expres-

[2]Giovanni Gregori made profound analysis of the Doppler phenomena **accepting** the Einstein reciprocity **postulate**, referred to by Gregori as 'the Einstein ABC-argument/theorem/experiment' where, following to Einstein [Einstein 1905 page 901], A, B, C are three time-like bodies, and B moves relative to A with the velocity $\mathbf{v}$, and a body C moves relative to B with the velocity $-\mathbf{v}$, therefore 'theorem' follows that A and C **must coincide** [Gregori 2005 page 106]. See also [Gregori 2010]. In fact this is neither theorem nor experiment, it is the Einstein reciprocity **postulate**. In the present note the Einstein reciprocity postulate is not accepted, and the Lorentz isometry transformations are not used.

sions. Where $\cos\phi_{MN}$ denotes the cosine of the inclination angle observed by the body M at rest, and $\cos\phi_{NM}$ denotes the cosine of the inclination angle observed by the body N at rest, and $\phi_{NM} \neq \phi_{MN}$. The inclination angle of the Poynting vector $\mathbf{c}_{ML}$ of a star with the vector $\mathbf{v}_{MN}$ (2.2), - that could be almost the inclination angle with the plane of the Earth around the Sun.

Thus, combining (1.7)-(1.9) and (3.1)-(3.2), the Doppler's relativity of radiation energies (or relativity of wavelengths) means the following linear system of two **independent** conditions,

$$\left.\begin{aligned} E_{ML} &= E_{NL}\,\gamma\left(1-\frac{v}{c_g}\cos\phi_{NM}\right) \\ E_{NL} &= E_{ML}\,\gamma\left(1-\frac{v}{c_g}\cos\phi_{MN}\right) \end{aligned}\right\} \tag{3.3}$$

$$\begin{pmatrix} 1-\frac{v}{c_g}\cos\phi_{MN} & -\frac{1}{\gamma} \\ -\frac{1}{\gamma} & 1-\frac{v}{c_g}\cos\phi_{NM} \end{pmatrix}\begin{pmatrix}\lambda_N \\ \lambda_M\end{pmatrix} = 0. \tag{3.4}$$

The consequence of the Doppler system (3.3)-(3.4) is the Bradley stellar aberration among inclination angles as the vanishing determinant of the matrix (3.4),

$$\left(1-\frac{v}{c_g}\cos\phi_{NM}\right)\left(1-\frac{v}{c_g}\cos\phi_{MN}\right) = \frac{1}{\gamma^2} = 1-\frac{v^2}{c_g^2}. \tag{3.5}$$

There are two solutions, $v = 0$, and $v \neq 0$,

$$v \neq 0 \quad\Longrightarrow\quad \frac{v}{c_g}\left\{1+(\cos\phi_{NM})(\cos\phi_{MN})\right\} = \cos\phi_{NM}+\cos\phi_{MN}, \tag{3.6}$$

$$v \neq 0 \quad\Longrightarrow\quad \cos\phi_{MN} = \frac{\cos\phi_{NM}-\frac{v}{c_g}}{\frac{v}{c_g}\cos\phi_{NM}-1} \tag{3.7}$$

The form (3.7) of the stellar aberration was deduced by Einstein from relativity of the electric and magnetic fields for $\phi' \equiv \pi - \phi_{MN}$. The Bradley stellar aberration (3.6)-(3.7) with one of the Doppler relation (3.3)-(3.4) gives the second Doppler relation.[3]

[3]It is not possible to deduce the Doppler for an angle ϕ_{MN} from the Doppler for ϕ_{NM} by, $\cos\phi_{MN} = -\cos\phi_{NM}$, as suggested by the Lorentz transformation that accept the Einstein reciprocity postulate, $\mathbf{v}_{MN} + \mathbf{v}_{NM} = \mathbf{0}$, cf with (3.6) or with (3.7).

3.1 Corollary (Doppler as the 'refraction-like' law). From (3.6), for $v \neq 0$, the both Doppler independent relations (3.3) are equivalent with the v-free law (3.9), that reminds the Willebrord Snell refraction law, **together** with v-dependent Bradley stellar aberration (3.6),

$$\text{if and only if} \quad v \neq 0 \quad \text{and} \quad E_{NL} \neq E_{ML}, \tag{3.8}$$

$$\left.\begin{aligned} E_{NL}\,|\sin\phi_{NM}| &= E_{ML}\,|\sin\phi_{MN}|, \\ \frac{v}{c_g}\{1+(\cos\phi_{NM})(\cos\phi_{MN})\} &= \cos\phi_{NM}+\cos\phi_{MN}. \end{aligned}\right\} \tag{3.9}$$

The 'refraction-like' law (3.9) one can compare with approach in [Wolfgang Rindler 1977, 2001, Chapter 3 *Einsteinian Optics*], see Exercises to Chapter 3 on page 260, especially Exercises 3.6, 3.8, 3.12; also §4.6 *Wave Motion.* Rindler assumes the Lorentz transformations that are not used in the present note.

For known radiation speed c_g, the measurements of aberration angles, ϕ_{NM} and ϕ_{MN}, determine from (3.6) the speed v between M and N, - or, for known speed v one can deduce the radiation speed c_g, as was done in [Bradley 1728]. Bradley was measuring the aberration angles at winter and at summer due to the continuos change of the Earth's velocity in its orbit around the Sun. So Earth at winter is M-body, and at summer is N-body, if one can imagine two Earths on the same orbit. Therefore the observed from Earth aberration of angles in (3.6) (six months apart) is correctly interpreted as due to the change of the velocity of Earth in its orbit around the Sun as stressed by [Hayden 1993]. However if one wish to interpret a speed v in (3.6) as a speed between N-Earth and M-star, then neither ϕ_{NM} nor ϕ_{MN} are known.

With respect to above Einsteinian optics theory of the Doppler phenomena of the relativity of the radiation energies, (3.3), it is worthy to made the following two observations.

3.1 Frequency zero shift does not implies zero velocity

Lightman et al. 1975 Problem 1.22. Zero speed among bodies, $v = 0$, implies equal radiation energies, $E_{ML} = E_{NL}$. However the equality of radiation energies, $E_{ML} = E_{NL}$ does not imply that the speed among bodies must be necessarily zero. The equality of energies, $E_{ML} = E_{NL}$, *i.e.* the frequency **zero** shift, besides $v = 0$, possesses also the solution for **arbitrary** non

zero scalar speed $v \neq 0$, using Doppler (3.3) and Bradley stellar aberration (3.6)-(3.4), with $\phi \equiv \phi_{NM} \neq \phi_{MN}$,

$$\cos\phi_{MN} = \cos\phi_{NM} = \sqrt{\frac{\gamma-1}{\gamma+1}}, \qquad 0 \neq \frac{v}{c_g} = \frac{2|\cos\phi|}{1+\cos^2\phi}. \tag{3.10}$$

In other words, for **arbitrary** non zero scalar speed, $v \neq 0$, the zero stellar aberration, $\cos\phi_{MN} = \cos\phi_{NM}$, is equivalent to frequency zero shift, $E_{ML} = E_{NL}$. In terms of the redshift factor 'z', known also as 'the symbolic speed',

$$1 + z \equiv \frac{E_{ML}}{E_{NL}} = \frac{\lambda_N}{\lambda_M}, \tag{3.11}$$

$$z = 0 \qquad \Longrightarrow \qquad \frac{v}{c_g} = 0, \qquad or \qquad 0 \neq \frac{v}{c_g} = \frac{2|\cos\phi|}{1+\cos^2\phi}. \tag{3.12}$$

3.2 Redshift factor determine interval of speeds

How the known radiation energies, $E_{ML} \neq E_{NL}$, could determine from the Einstein formula for the Doppler relativity (3.3), the scalar speed v/c_g among two bodies without knowledge of the direction of the *vector* of relative velocity between bodies M and N ? The aberration (3.6)-(3.7) is the consequence of Doppler relativity (3.3). The system of two linear equations (3.3) for the given radiation energies, is the system of two quadratic equations for **three** independent unknown $\{v \neq 0, \cos\phi_{MN}, \cos\phi_{NM}\}$. Equivalently, the first Doppler equation in (3.3) is equation for two independent unknown, the quadratic equation for a speed $v \neq 0$ and for unknown direction $\cos\phi_{NM}$ relative to the reference N-body/Earth. This gives the Doppler following solution for the unknown M-galaxy/star's speed, v/c_g, in terms of the still unknown direction/parameter $\cos^2\phi$, with $\phi \equiv \phi_{NM}$,

$$\begin{aligned}
\frac{v}{c_g}(\cos^2\phi) &= \frac{|(E_{NL})^2\cos\phi \pm E_{ML}\sqrt{(E_{ML})^2 - (E_{NL})^2\sin^2\phi}|}{(E_{ML})^2 + (E_{NL})^2\cos^2\phi} \\
&= \frac{|\lambda_M^2\cos\phi \pm \lambda_N\sqrt{\lambda_N^2 - \lambda_M^2\sin^2\phi}|}{\lambda_N^2 + \lambda_M^2\cos^2\phi} \\
&= \frac{|\cos\phi \pm (1+z)\sqrt{z(z+2) + \cos^2\phi}\,|}{(1+z)^2 + \cos^2\phi} < 1.
\end{aligned} \tag{3.13}$$

Textbooks claim that the Doppler relativity of energy can determine the speed 'v' along the line of sight **only**, [see e.g. Hayden 1993 page 89; Nick

Strobel's WEB page]. It is suggested therefore the **real** existence of the mysterious radial speed under at hoc pre-conception that one can assume in the Einstein formula (3.3) that $\sin\phi = 0$. In fact the Doppler solution (3.13) for unknown $\cos^2\phi$, determine an *interval* of possible values for the scalar speed, for example

$$\frac{v}{c_g}(1) = \frac{|z(z+2)|}{2(1+z)+z^2} \leq \quad \frac{v}{c_g} \quad \leq \frac{\sqrt{|z(z+2)|}}{1+z} = \frac{v}{c_g}(0) \tag{3.14}$$

Whereas the textbooks suggest that the scalar speed is strictly given by the *redshift factor* 'z' (3.11) known also as the *symbolic speed*, $v/c_g = z$.

The vanishing of the derivative of v/c_g (3.13) with respect to $\cos^2\phi$, gives the following expression for $\cos^2\phi$,

$$\cos^2\phi = \frac{3}{2} + z(z+2) - \sqrt{\frac{9}{4} + 2z(z+2)} \quad \in \quad [0,1]. \tag{3.15}$$

In the cases that the redshift factor 'z' is such that the expression (3.15) fall into the real interval $[0,1]$, then it is worth to study, besides, longitudinal/radial $\cos^2\phi = 1$ and transversal $\cos^2\phi = 0$, also the $\cos^2\phi$ given by expression (3.15).

4 The Einstein formula for the reflexion of radiation from a moving mirror

There are two time-like bodies, P-police (Einstein's K-system) and a mirror/car M (Einstein's k-system). The radiation falling on mirror/car is light-like L, and reflected light-like radiation is R. It is assumed by Einstein that these both radiations possesses the equal energies relative to mirror/car M as the reference body at rest, *i.e.* $E_{MR} \approx E_{ML}$ [Einstein 1905 §8 page 914]. This assumption neglect the kinetic energy of the recoil mirror. Moreover, Einstein is assuming that these radiations have exactly the opposite Poynting vectors (relative to M), and again this is up to conservation of momenta. Therefore the reflected R-beam is *defined* by Einstein by the following two approximate conditions

$$E_{MR} \approx E_{ML}, \qquad R + L \approx 2\,E_{ML}\,M. \tag{4.1}$$

The above definition of reflected light-like R-radiation allows to determine the energy E_{PR} of R-radiation relative to the reference body P,

$$E_{PR} \approx 2\,\gamma\, E_{ML} - E_{PL}. \tag{4.2}$$

Inserting here for E_{ML} the Doppler relation (3.3) in terms of E_{PL}, gives the approximate expression for the reflected energy[4]

$$E_{PR} \approx E_{PL}\,\frac{1 - 2(v/c_g)\cos\phi_{PM} + (v^2/c_g^2)}{1 - v^2/c_g^2}. \tag{4.3}$$

Einstein used twice the Doppler relativity, ones for falling L-radiation (L relatives to P and M), and then Doppler for reflected R-radiation (R relatives to P and M). Einstein consider the reflexion as the Doppler phenomena *double*. This was superfluous as it is shown above.

Supposing that, $\sin\phi_{PM} = 0$, *i.e.* the police radar gun, as the reference body P, transmits a radio wave in the same direction as the velocity of a car (the velocity of a car is parallel to Poynting vector of L-radiation). Then

$$\frac{v}{c_g}\Big|_{\sin\phi_{PM}=0} = \frac{|E_{PL} - E_{PR}|}{E_{PL} + E_{PR}} = \frac{|\lambda_R - \lambda_L|}{\lambda_R + \lambda_L}. \tag{4.4}$$

The Doppler phenomena needs at least **two** different reference bodies for each single radiation. However the Einstein deduction of reflection from moving mirror (4.3) in fact was *not* possible without the energy and momenta *conservation* together with the Doppler *relativity* of radiation energy. This rise the suspicion that maybe the reflection of radiation from moving mirror (or reflection from a moving car) do not need at all the Doppler phenomena, and can be understand exclusively in terms of the energy-momenta **conservation**. The next section derive the exact formula (substituting (4.3)) using exclusively the conservation of energy-momenta and this will show that in fact (4.3)-(4.4) is not related to the Doppler phenomena.

[4]In the Einstein expression in [1905 §8, page 915] there is a misprint in denominator, there is incorrectly $(1 - v/c)^2$, instead should be, $1 - v^2/c^2$, as in (4.3).

5 The Compton scattering and the Compton reflexion

The Compton scattering/collision/reflection of the radio radiation by car needs **two** radiations (emitted and reflected) as measured from the **single** reference body (from police gun). This scattering does not use the Doppler phenomena of relativity of the radio energy.

The scattering (collision) of the monochromatic radiation by free electron/car/moon operate on conservation of energy-momenta, and such scattering include also the reflexion as the particular case of the Compton scattering. Let P denotes the time-like vector field of the reference body (laboratory, police radar gun). Let M be a time-like vector field of the scattered object (be a free electron, or a car, or a moving mirror) with *internal* energy $E_{MM} = m_M c_g^2$, *i.e.* energy of M relative to M as the reference body.

There is the primary (emitted) L-radiation before scattering, denoted by light-like vector field L, and scattered (in particular reflected) R-radiation denoted by light-like vector field R. This scattering as seen from the reference body P possesses three space-like vectors, the vector of velocity of moving mirror/car M relative to P, as well as two Poynting vectors of the emitted and scattered radiations relative to observing reference body P. Therefore the final expression for such scattering will include the cosines of *three* angles, all as seen by P. One can denotes these **three** angles as follows

- $\cos\alpha_{PM}$, where $\alpha \equiv \alpha_{PM}$ is an angle between the velocity vector of M relative to P, $\mathbf{v}_{PM}$, and the Poynting vector of the emitted primary radiation as seen/measured by P, $\mathbf{c}_{PL}$.

- $\cos\beta_{PM}$, where $\beta \equiv \beta_{PM}$ is an angle between the velocity vector of M relative to P, $\mathbf{v}_{PM}$, and the Poynting vector of the scattered (reflected) R-radiation as seen by P, $\mathbf{c}_{PR}$.

- $\cos\theta_P$, where $\theta \equiv \theta_P$ is an angle between the Poynting vectors of the emitted and scattered radiations. This angle appears in the Compton formula [Compton 1923] pre-supposing that the scattered electron is at rest, *i.e.* the angle $\theta = \theta_M$, as seen/measured by M, but $\theta_M \neq \theta_P$, and $\cos\theta_M \neq \cos\theta_P$.

Let $N^2 = M^2 = P^2 = \det g = -c_g^2$, (1.4)-(1.8). The conservation of energy-momenta in an elastic scattering, $E_{NN} = E_{MM}$, means the following

vector law,

$$L + E_{MM}M = E_{NN}N + R \qquad \Longrightarrow \qquad E_{MM}M \cdot (L - R) = L \cdot R. \quad (5.1)$$

Let P be a time-like reference body (police radar gun), with the bounded scalar speed $v \equiv |\mathbf{v}_{PM}|$ between M and P, $v < c_g$. Presenting L, R and M in energy-momenta conservation (5.1) as seen relative to P, as P-splits, no Lorentz group is used, gives

$$L \cdot R = E_{PL}E_{PR}(\det g + c_g^2 \cos\theta_P) = (\det g)E_{PL}E_{PR}(1 - \cos\theta_P), \quad (5.2)$$

$$M \cdot (L - R) = (\det g)\gamma(E_{PL} - E_{PR}) + \gamma v c_g(E_{PL}\cos\alpha - E_{PR}\cos\beta). \quad (5.3)$$

This leads to the difference of radiation energies (emitted and scattered/reflected) relative to reference body P-police radar gun,

$$E_{PL} - E_{PR} = (E_{PL}\cos\alpha - E_{PR}\cos\beta)\,\frac{v}{c_g} + \sqrt{1 - \frac{v^2}{c_g^2}}\,\frac{E_{PL}E_{PR}}{E_{MM}}\,(1 - \cos\theta_P) \quad (5.4)$$

The above Compton scattering on moving Moon/car/mirror/electron (5.4) is the main result of the present note. In a choice, $P = M$, *i.e.* if scattered object M is at rest with the zero scalar speed $v = 0$, the above expression is reduced to the Compton scattering of radiation by free electron, and involve the Compton wavelength $hc_g/E_{MM} = h/m_M c_g$.

One can consider the **reflexion** of radiation by an object/mirror/car M. Radio-wave reflects off a car back to the radar gun. Let the radar gun is located in the middle of the road and let a car moves in the same direction as the emitted L-radiation, $\cos\alpha = +1$, $\cos\beta = -1$, and $\cos\theta_P = -1$. In this case the conservation of energy-momenta (and **not** the Doppler phenomena) gives the following **exact** expression for the car's speed

$$\frac{v}{c_g}\Big|_{\substack{\cos\alpha = +1 \\ \cos\beta = -1}} = \frac{|E_{PL} - E_{PR}|}{E_{PL} + E_{PR}} - 2\sqrt{1 - \frac{v^2}{c_g^2}}\,\frac{E_{PL}E_{PR}}{E_{MM}(E_{PL} + E_{PR})} \quad (5.5)$$

The police speed gun invented in 1954 is a radio transmitter and receiver. It is said in many texts about the radar accuracy question that the device (speed-gun) determines the car's speed from the difference in the energies (or

from the differences of frequencies or wavelength) of the transmitted L-beam and reflected R-beam, and that **is based on the Doppler phenomena** as presented by Albert Einstein in 1905 (3.3). Instead, the above discussion is showing that in fact only **conservation of energy-momenta** is involved and that car's speed has nothing to do with the Doppler phenomena.

Fritz Zwicky in 1929 [Zwicky 1929, 1933, 1935] noted that the Compton scattering (elastic and non-elastic) of photon radiation by interstellar and intergalactic dilute gaseous matter including scattering by free relativistic electrons suggested by cosmic radiation, could be the *rival* process for the Doppler's red-shifts of spectral lines. Radiation from distant nebulae/galaxies would undergo a shift to the red by Compton scattering on free electrons.

A Transformation of Poynting vectors

The Doppler relativity of radiation energies should be completed with the relativity of the space-like Poynting vectors of the L-radiation relative to two reference bodies M and N. The corresponding two independent expressions completing the Doppler relativity of energies (3.3)-(3.4), are as follows

$$\left.\begin{aligned} \mathbf{c}_{ML} &= \frac{E_{NL}}{E_{ML}}\,\mathbf{c}_{NL} - \gamma\,\mathbf{v}_{NM} + \left(\frac{E_{NL}}{E_{ML}} - \gamma\right) N \\ \mathbf{c}_{NL} &= \frac{E_{ML}}{E_{NL}}\,\mathbf{c}_{ML} - \gamma\,\mathbf{v}_{MN} + \left(\frac{E_{ML}}{E_{NL}} - \gamma\right) M \end{aligned}\right\} \tag{A.1}$$

In above the inverse follows from interchanging $M \longleftrightarrow N$, however it is forbidden to replace $\mathbf{v}_{NM}$ by $-\mathbf{v}_{MN}$, due to postulated non-reciprocity (2.2). Non reciprocal velocities extort that transformed space-like Poynting vectors possess also orthogonal time-like components.

References

Ashby Neil. Relativity and the global positioning system. Physics Today **55** (5) (May 2002) 41-47

Bradley James, Account of a new discovered motion of the Fix'd stars. Philosophical Transactions Volume **35** (1728) page 637

Einstein Albert (1905) : Zur Electrodynamik bewegter Körper, Annalen der Physik (Leipzig) **17** 891–921

Field George B., Halton C. Arp, and John N. Bahcall. The Redshift Controversy. Advanced Book Program, Frontiers in Physics. Reading Benjamin, INC. 1973, 1976

Gregori Giovanni P. Relativity, Quanta, Gravitation and Cosmology, Rome: Science Edition 2005, ISSN 1615-2824

Gregori Giovanni P. The correct formula for the Doppler effect and the Pioneer anomaly. Galilean Electrodynamics 2010

Hayden Howard C., Stellar aberration. Galilean Electrodynamics Volume **4** no. 5 (Sept./Oct. 1993) 89-92

Ivezić Tomislav, Lorentz transformations of the electric and magnetic fields according to Minkowski, Physica Scripta **82** (2010) 1-6; arXiv:physics.gen-ph 0906.3166

Lightman Alan P., William H. Press, Richard H. Price, and Saul A. Teukolsky. Problem Book in Relativity and Gravitation. Princeton University Press, Princeton, New Jersey 1975. Problems 1.18, 1.19, 1.22, 2.1

Matolcsi Tamás (1994) : Spacetime without Reference Frames, Budapest: Akadémiai Kiadó ISBN 9630564335. §4.7 page 200

Minkowski Hermann (1908) Die Grundlagen für die electromagnetischen Vorgänge in bewegten Körpen, Nachrichten von der König. Gesellschaft der Wissenschaften zu Göttingen, Mathematisch-Physikalische Wiss. Klasse, 53–111

- Reprinted in: Minkowski Hermann *Gesammelte Abhandlungen* Unter Mitwirkung A. Speiser, H. Weyl, Hrsg. David Hilbert. Leipzig, Berlin: B. G. Teubner 1911, Bd. 2. S. 352–404
- The French translation by Paul Langevin, manuscript at: http://hal.archives-ouvertes.fr/hal-00321285/fr/.
  Paul Langevin, inventor of the twin paradox, paradox known also as the Langevin paradox.

- The fundamental equations for electromagnetic processes in moving bodies, http://en.wikisource.org, in: The Principle of Relativity, Calcutta University Press 1920, pp. 1–69. Translated by Megh Nad Saha.
- The Russian translation in: *Einsteinian Sbornik 1978-1979* Moskva: Nauka 1983, pages 5-63
- Hermann Minkowski, The fundamental equations for electromagnetic processes of mobil bodies, pages 1–45, translated by A. F. Kracklauer 2010

Ostro Steven J. Planetary radar astronomy. Review of Modern Physics Volume **65** No 4 (October 1993) 1235-1276

Oziewicz Zbigniew. Electric field and magnetic field in a moving reference system. Review Bulletin of the Calcutta Mathematical Society Volume **16** (1) (2008) pages 49-66

Oziewicz Zbigniew. Magnetic and electric fields: do they need Lorentz group covariance? Short version in Journal of Physics: Conference Series Volume **330** (2011) pages 1-28 http://iopscience.iop.org/1742-6596/330/1/012012. Full version of 69 pages available from author.

Rindler Wolfgang (1969) : Essential Relativity, Special, General, and Cosmological, Springer-Verlag New York 1969, 1977; Oxford University Press 2001. Chapter 3 *Einsteinian Optics.*

Santilli Rugerro Maria, Isodual Theory of Antimatter with applications to Antigravity, Grand Unification and Cosmology. Fundamental Theories of Physics Volume 151. Springer 2006

Santilli Rugerro Maria, Compatibility of arbitrary speeds with special relativity axioms for interior dynamical problems. American Journal of Modern Physics 2015, pages 1-19

Schrödinger Erwin. Dopplerprinzip und Bohrsche Frequenzbedingung. Physikalische Zeitschrift **23** Jahrgang (1922) Seite 301-303

Schrödinger Ernst (1931) : Specielle Relativitätstheorie und Quantenmechanik, Sitzungsber. Preuss. Akademie Wissen. phys.-math. **Bd. 12** 238–247

Schrödinger Ernst. Expanding Universes. Cambridge University Press 1956

Strobel Nick, www.astronomynotes.com. Doppler effect.

Tifft William G., and William J. Cocke, Editors. Modern Mathematical Models of Time and their Applications to Physics and Cosmology. Kluwer Academic Publishers, Dordrecht 1997. Reprinted from *Astrophysics and Space Science* Volume **244** Nos. 1-2 (1966)

Voigt Woldemar, Über das Doppler'sche Princip. Göttinger Nachrichten Ges. Wiss. (1887) pages 41- 45

Zwicky Fritz. On the red shift of spectral lines through interstellar space. Proceedings of the National Academy of Sciences of the United States of America **15** (1929) 773-779

Zwicky Fritz. Die rotverschiebung von extragalaktischen Nebeln. Helvetica Physica Acta **6** (1933) pp. 110-127

Zwicky Fritz. Remarks on the redshift from nebulae. Physical Review **48** (1935) pp. 802-806

WEB pages

http: //www.mathpages.com/rr/s2-04/2-04.htm. §2.4 Doppler shift for sound and light. §2.5 Aberration.